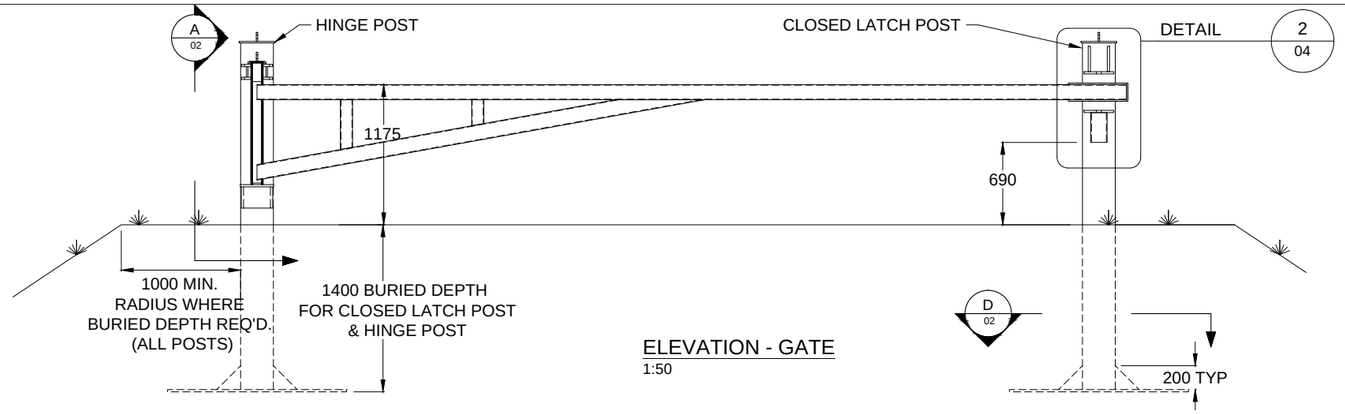

ELEVATION - GATE
1:50

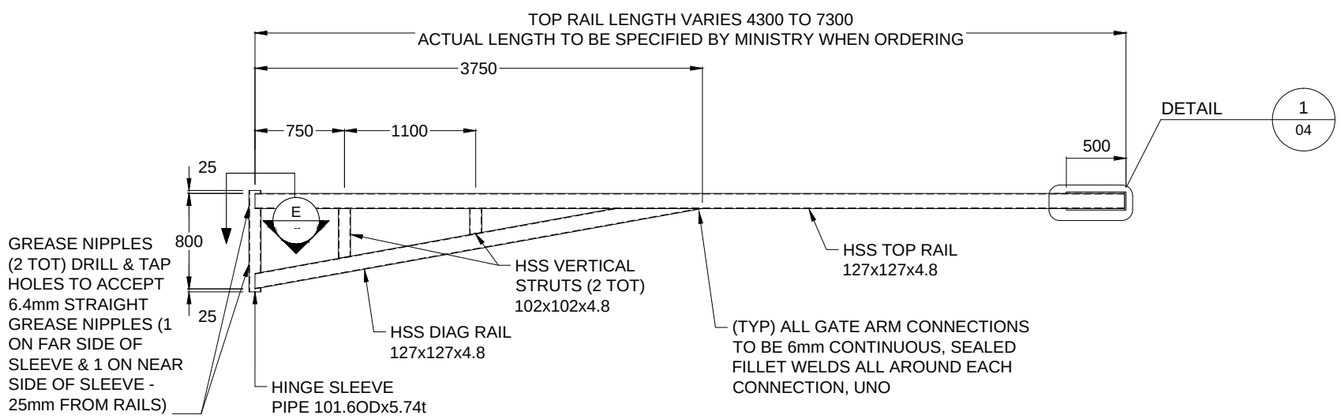

FIXED LENGTH GATE ARM ELEV.
1:50

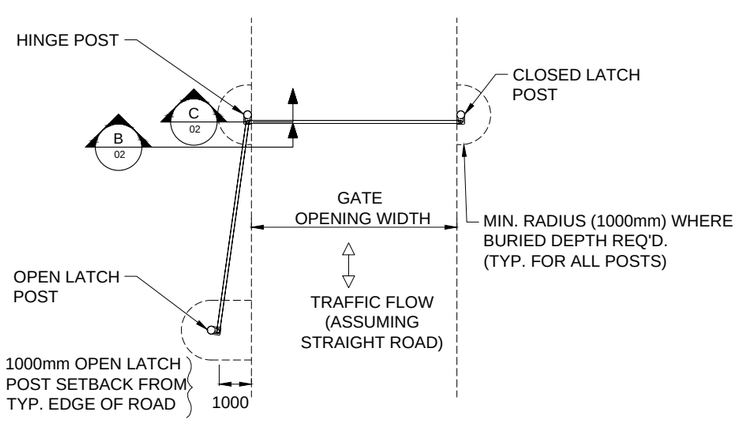

GENERAL GATE LAYOUT PLAN
1:200

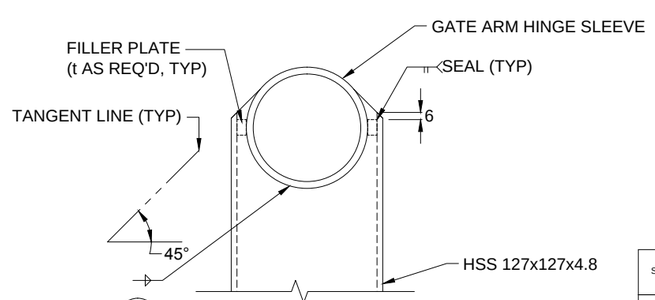

SECTION E: HINGE SLEEVE TO GATE ARM CONNECTIONS
1:5

NOTES

1.0 GENERAL

- THESE DRAWINGS PROVIDE STRUCTURAL DETAILS FOR FABRICATION OF ROAD CLOSURE GATES FOR INSTALLATION ON RESOURCE ROADS UNDER THE JURISDICTION OF THE BC MINISTRY OF FORESTS, LANDS AND NATURAL RESOURCE OPERATIONS (FLNRO).
- ROADWAY DESIGN, TURNAROUND REQUIREMENTS, GATE LOCATION, GATE INSTALLATION REQUIREMENTS, ROAD AND GATE SIGNAGE, APPROACH BARRIER REQUIREMENTS, AND OVERALL SAFETY SHALL BE DETERMINED BY AN INDIVIDUAL THAT TAKES RESPONSIBILITY FOR GATE INSTALLATION AT A SPECIFIC SITE.
- ANY INSTALLATION OR SIGNAGE REQUIREMENTS SHOWN ON THESE DRAWINGS MUST BE REVIEWED AND AMENDED AS NECESSARY BY THE RESPONSIBLE INDIVIDUAL.
- STANDARD CHECKERBOARD SIGNS SHALL BE ATTACHED, CENTRALLY, TO THE GATE ARM FOR VISIBILITY WHEN THE GATE IS CLOSED. ALL POSTS SHALL HAVE 300X900 STANDARD MINISTRY BRIDGE DELINEATORS ATTACHED TO THE TOP OF THE POST, EXTENDING ABOVE THE POST. POSTS SHALL ALSO HAVE REFLECTIVE TAPE ATTACHED, FULL LENGTH. REFLECTIVE TAPE SHALL BE ATTACHED, FULL LENGTH, TO THE GATE ARM TOP RAIL, DIAGONAL RAIL, HINGE SLEEVE, AND VERTICAL STRUTS. REFLECTIVE TAPE SHALL BE YELLOW/BLACK OR WHITE/BLACK STRIPED, MIN. 100 mm WIDE, HIGH STRENGTH ROADWAY DELINEATION TAPE, APPLIED IN ACCORDANCE WITH MANUFACTURER'S DIRECTIONS AFTER PAINTING. REFLECTIVE TAPE, CHECKERBOARD SIGNS AND DELINEATORS SHALL BE VISIBLE TO TRAFFIC FROM EACH DIRECTION.
- GATE ARM MUST BE LATCHED/SECURED AT ALL TIMES (OPEN OR CLOSED) TO ENSURE AGAINST SPEARING OF VEHICLES FROM AN UNSECURED ARM.
- POST FOOTINGS SHALL BE PLACED ON A COMPETENT, FIRM SOIL OR GRAVEL BASE, AND SHALL BE BACKFILLED WITH 300mm LIFTS OF COMPETENT GRANULAR SOIL FREE OF ORGANICS (COMPACTED TO 95% STANDARD PROCTER). FOUNDATION CONDITIONS & COMPACTION TO BE VERIFIED BY A QUALIFIED PROFESSIONAL.

2.0 MATERIALS

- HSS: Fy MIN. 345MPa, CSA G40.21M OR ASTM A500 GRADE C (BOTH SEAMED)
- PLATE: Fy MIN. 300W OR 350W, CSA G40.21M
- BOLTS: ASTM 307 GALV
- ROUND BAR: ASTM A36
- NUTS: ASTM A563 GALV
- STANDARD WASHERS: ASTM F844 GALV
- HINGE PIPES: ASTM A53 GR B (SEAMED) OR ASTM A106 GR B (SEAMLESS)
- POST PIPES: ASTM A53 GR B OR ASTM A252 GR 2

3.0 FABRICATION

- UNLESS NOTED OTHERWISE, ALL WELDS SHALL BE 6 mm IN SIZE.
- NO EXPOSED SHARP CORNERS PERMITTED ON STEEL COMPONENTS.
- WELDING SHALL BE IN ACCORDANCE WITH CSA W59 BY A COMPANY CERTIFIED TO CSA W47.1 FOR DIVISION 1, 2, OR 3.
- ALL STEEL GATE COMPONENTS SHALL HAVE THEIR EXTERIOR PAINTED, EXCEPT AS NOTED HEREIN, IN ACCORDANCE WITH THE MINISTRY "STEEL GUARDRAIL COMPONENT PAINT STANDARD" LOCATED AT:
  http://www2.gov.bc.ca/assets/gov/farming-natural-resources-and-industry/natural-resource-use/resource-roads/steelgdrailpaintstd.pdf
- COMPONENTS NOT TO BE PAINTED INCLUDE: PORTION OF HINGE PIN PIPE BELOW ITS CAP, LATCH PIN CHAIN, LATCH PIN, LOCK KEEPERS, INTERIOR OF HINGE BASE COLLAR, INTERIOR OF HINGE TOP COLLAR, FOOTINGS, PORTION OF POSTS BURIED > 600MM DEPTH.
- EXTERIOR OF UNPAINTED PORTION OF HINGE PIN PIPE TO BE SANDBLASTED AS PER PAINT SPECIFICATION.
- FABRICATOR SHALL ENSURE THAT ALL COMPONENTS FIT APPROPRIATELY AND MOVE OR ROTATE EASILY AND SMOOTHLY AS REQUIRED TO MEET THE REQUIRED FUNCTION. IF ACTUAL STEEL PIECES OBTAINED BY THE FABRICATOR DO NOT FUNCTION APPROPRIATELY, IT SHALL BE THE RESPONSIBILITY OF THE FABRICATOR TO REPLACE OR MODIFY THE PIECES AT NO COST TO THE MINISTRY. ANY SUCH MODIFICATIONS OR REPLACEMENTS REQUIRE PRIOR APPROVAL BY THE MINISTRY. FABRICATOR SHALL PAY PARTICULAR ATTENTION TO THIS REQUIREMENT WHEN ORDERING HINGE PIPES AND TELESCOPING GATE ARM HSS PIECES (IF TELESCOPING SPECIFIED) DUE TO THE POSSIBILITY OF EXCESSIVELY PROTRUDING INTERIOR LONGITUDINAL WELD SEAMS.
- GATE SHALL BE COMPLETELY ASSEMBLED AND APPROPRIATE FUNCTIONING SHALL BE ENSURED BY FABRICATOR PRIOR TO DISASSEMBLY AND SHIPMENT TO THE MINISTRY.

ASSUME NOT TO SCALE

ORIGINAL SIGNED AND SEALED

SCALE	AS SHOWN	Designed M.P.	Date June 1, 2017
		Checked G.M.	Date June 1, 2017
		Drawn N.H.	Date June 1, 2017

REV	DATE	DESCRIPTION	INITAL

REVISIONS

BRITISH COLUMBIA
MINISTRY OF FORESTS, LANDS AND NATURAL RESOURCE OPERATIONS

STANDARD GATE DRAWING

STANDARD BURIED FOOTING ROAD CLOSURE GATE - DWG. 1 OF 4

ORIGINAL SIGNED and SEALED BY: M. PENNER, P.ENG.

APPROVED BY: B. CHOW, P.ENG. CHIEF ENGINEER

FILE NUMBER:

DRAWING NUMBER: STD-G-011-01 | 0

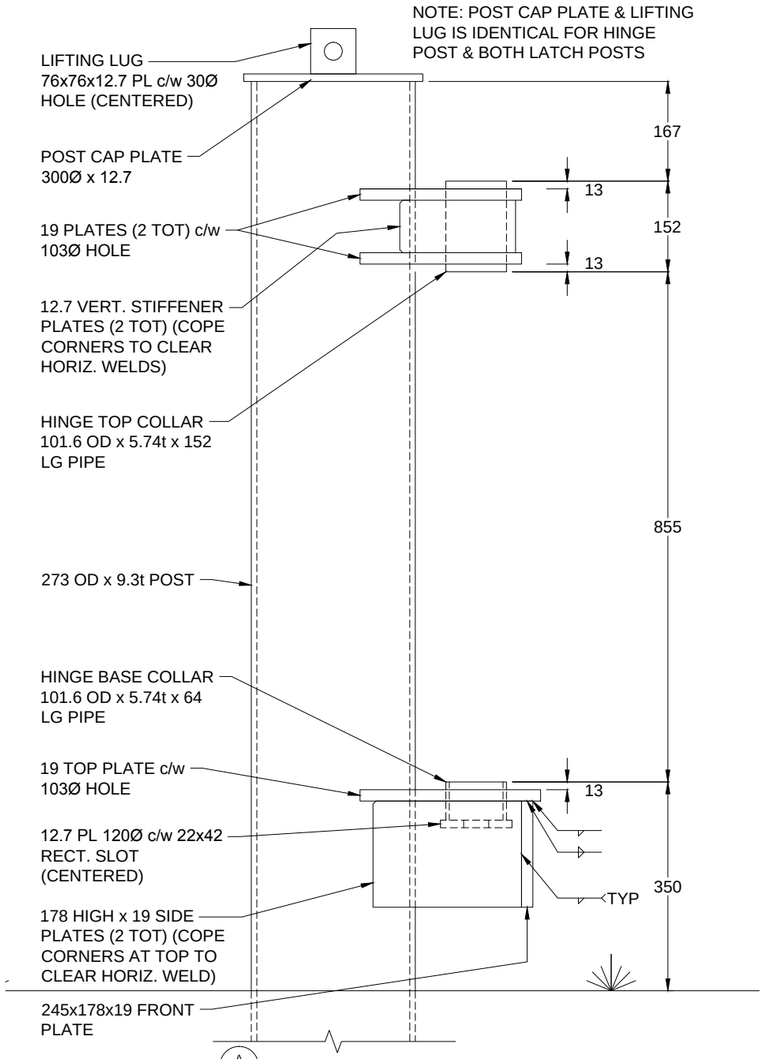

SECTION A/01 : HINGE POST SIDE ELEV.
1:10 (HINGE PIN & GATE ARM NOT SHOW FOR CLARITY)

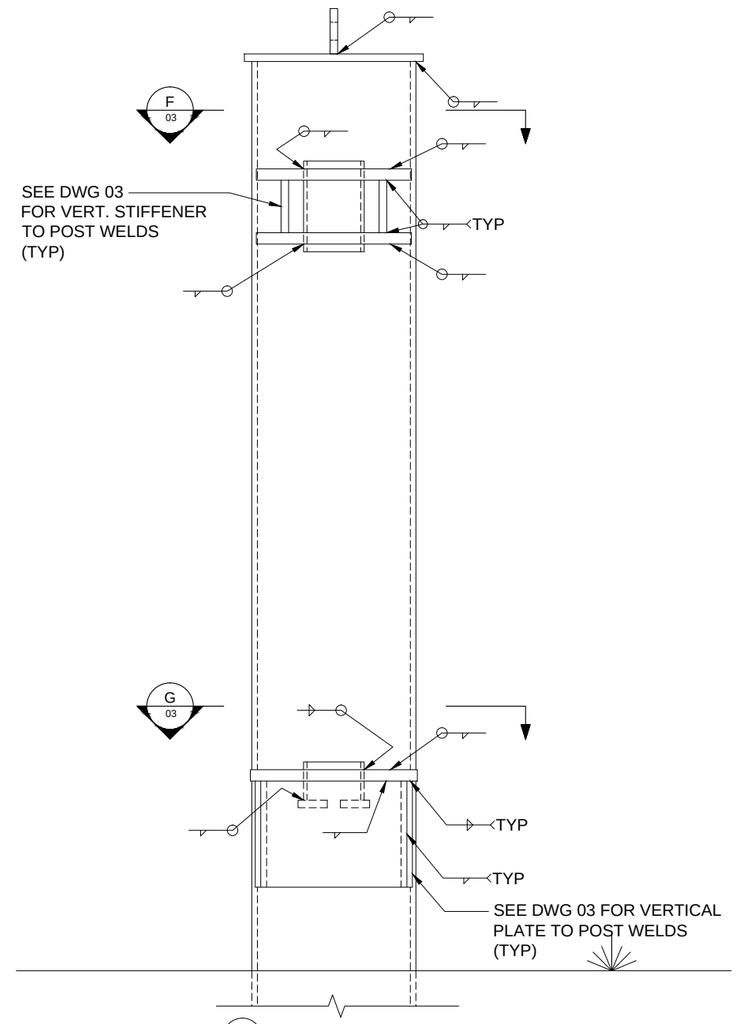

SECTION B/01 : HINGE POST FRONT ELEV.
1:10 (HINGE PIN & GATE ARM NOT SHOW FOR CLARITY)

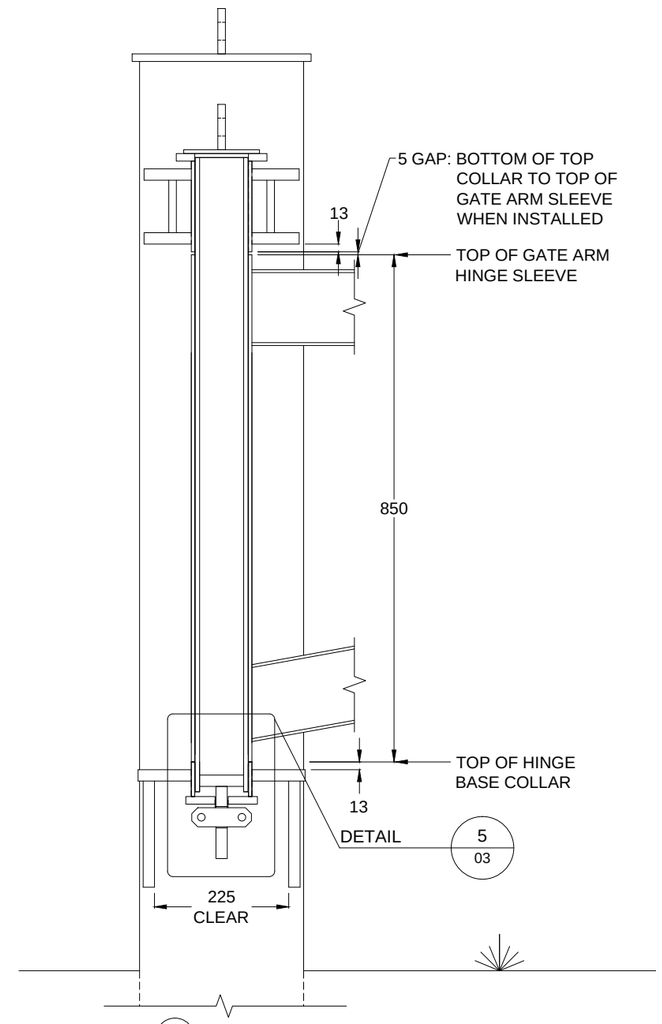

SECTION C/01 (THROUGH HINGE PIN ℄): HINGE ASSEMBLY
1:10 (SHOWING PIN & GATE ARM SLEEVE)

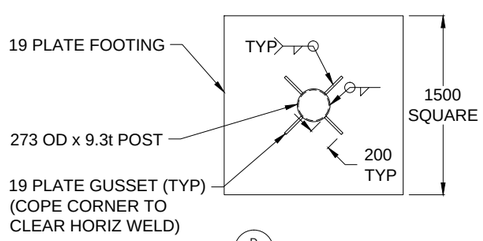

SECTION D/01 : HINGE POST & CLOSED LATCH POST FOOTING PLAN
1:50

NOTE: OPEN LATCH POST VARIES AS FOLLOWS:
1. BURIED DEPTH = 1200mm
2. PLATE FOOTING SIZE - 1219mm SQUARE
3. NO GUSSETS
IN ALL OTHER REGARDS, THE CLOSED LATCH POST & OPEN LATCH POST (INCLUDING LATCHING DETAILS) ARE IDENTICAL

ASSUME NOT TO SCALE

ORIGINAL SIGNED AND SEALED

SCALE	AS SHOWN	Designed M.P.	Date June 1, 2017
		Checked G.M.	Date June 1, 2017
		Drawn N.H.	Date June 1, 2017

REV	DATE	DESCRIPTION	INITAL

REVISIONS

BRITISH COLUMBIA
MINISTRY OF FORESTS, LANDS AND NATURAL RESOURCE OPERATIONS

STANDARD GATE DRAWING

STANDARD BURIED FOOTING ROAD CLOSURE GATE - DWG. 2 OF 4

ORIGINAL SIGNED and SEALED BY: M. PENNER, P.ENG.

APPROVED BY: B. CHOW, P.ENG. CHIEF ENGINEER

FILE NUMBER:

DRAWING NUMBER: STD-G-011-02 | 0

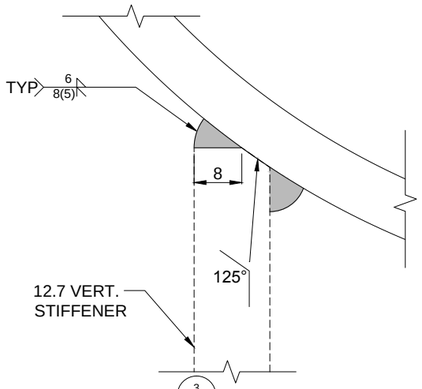

DETAIL 3/- : UPPER HINGE PIN HOLDER VERT. STIFFENER TO POST CONNECTION
1:1

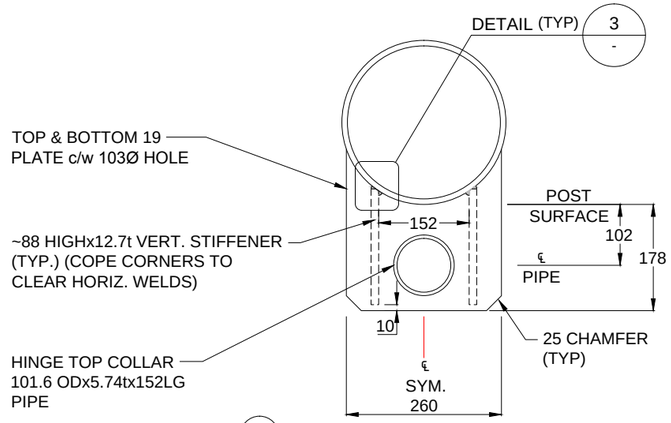

SECTION F/02 :UPPER HINGE PIN HOLDER - PLAN
1:10

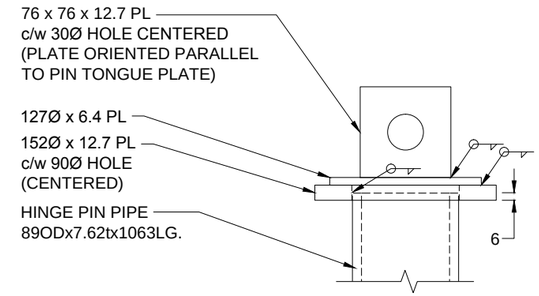

TOP OF HINGE PIN - ELEV.
1:5

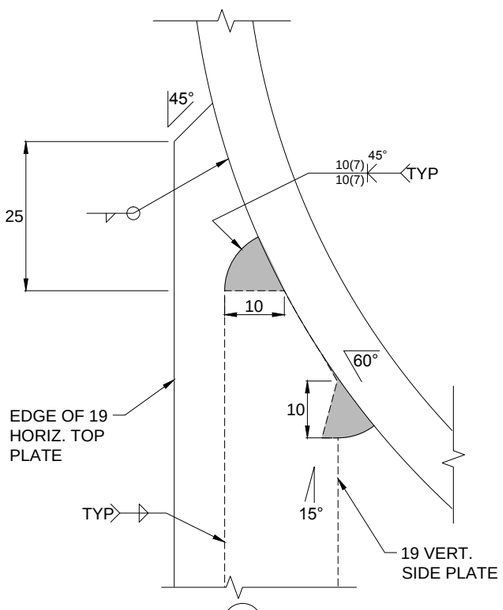

DETAIL 4/- : HINGE BASE TO POST CONNECTION (MISC. DETAILS)
1:1

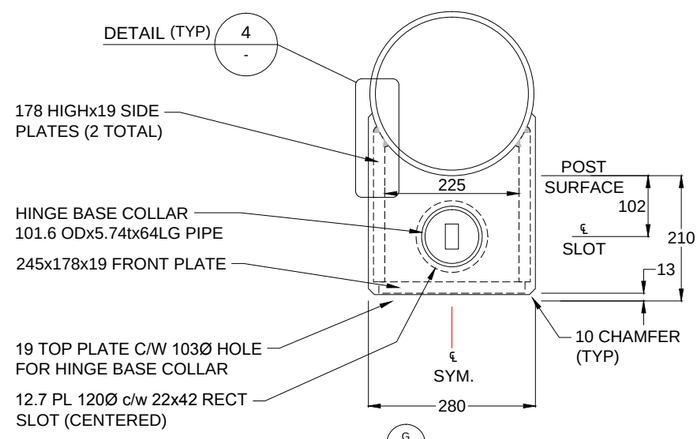

SECTION G/02 :HINGE BASE - PLAN
1:10

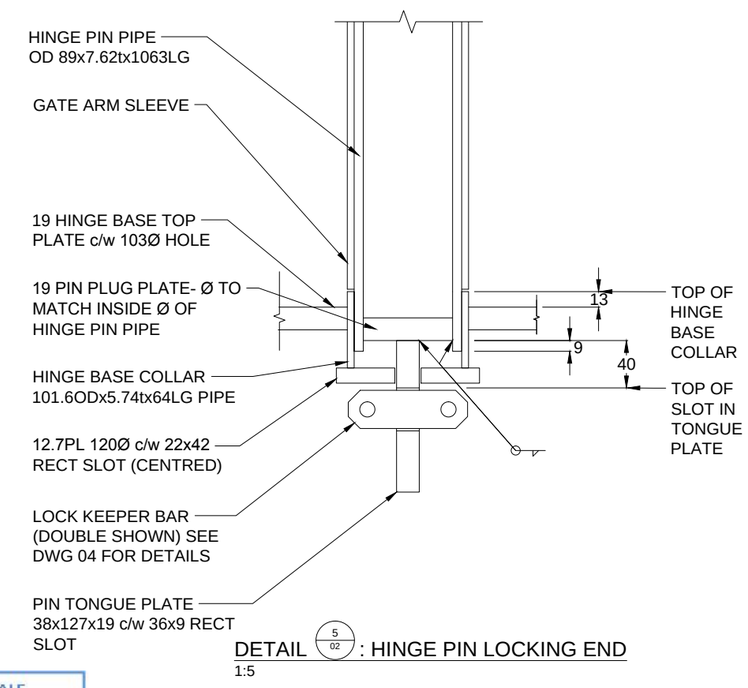

DETAIL 5/02 : HINGE PIN LOCKING END
1:5

ASSUME NOT TO SCALE

ORIGINAL SIGNED AND SEALED

BRITISH COLUMBIA
MINISTRY OF FORESTS, LANDS AND NATURAL RESOURCE OPERATIONS

SCALE AS SHOWN

Designed M.P. Date June 1, 2017
Checked G.M. Date June 1, 2017
Drawn N.H. Date June 1, 2017

REV	DATE	DESCRIPTION	INITAL

REVISIONS

STANDARD GATE DRAWING

STANDARD BURIED FOOTING ROAD CLOSURE GATE - DWG. 3 OF 4

ORIGINAL SIGNED and SEALED BY: M. PENNER, P.ENG.

APPROVED BY: B. CHOW, P.ENG. CHIEF ENGINEER

FILE NUMBER:

DRAWING NUMBER: STD-G-011-03 | 0

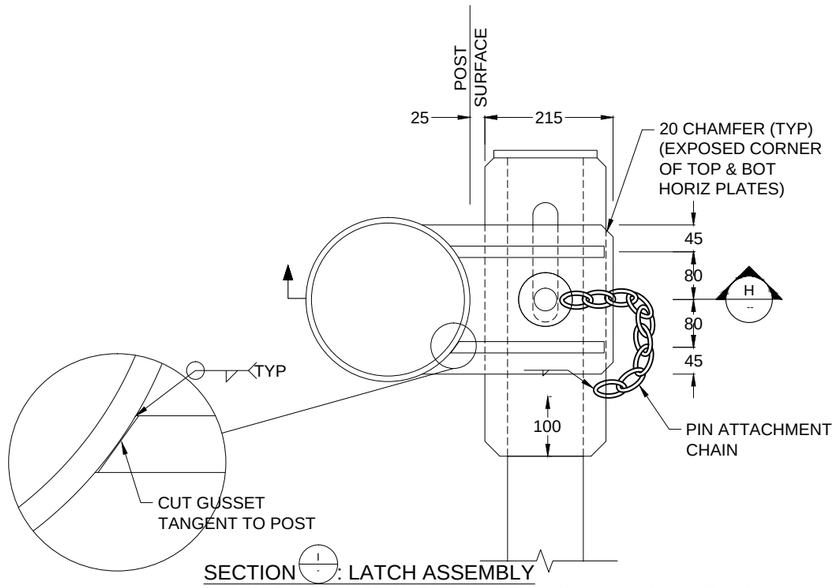

SECTION I : LATCH ASSEMBLY
(LOCK BOX COMPONENTS NOT SHOWN FOR CLARITY)
1:10

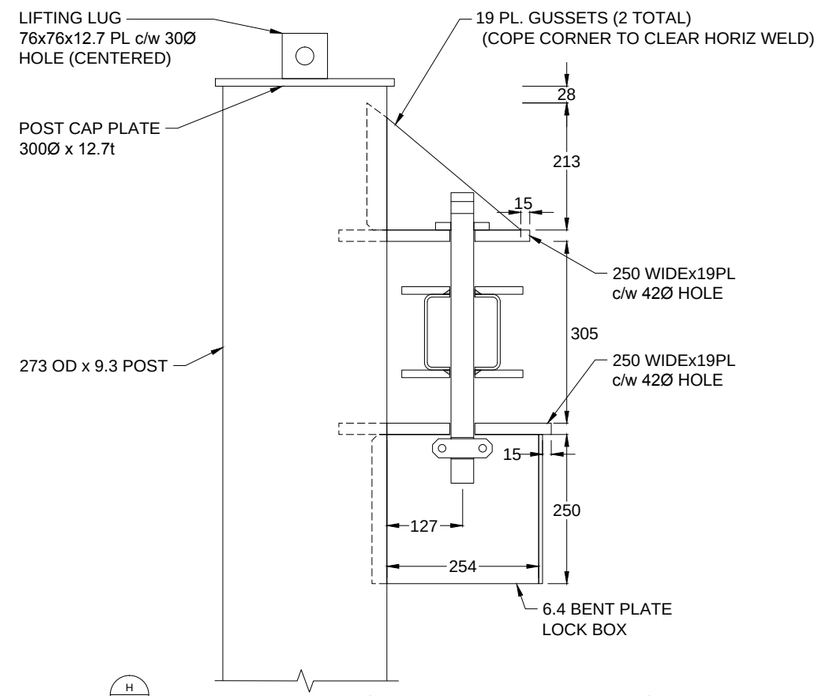

SECTION H :LATCH ASSEMBLY - (SHOWING PIN & GATE ARM)
1:10

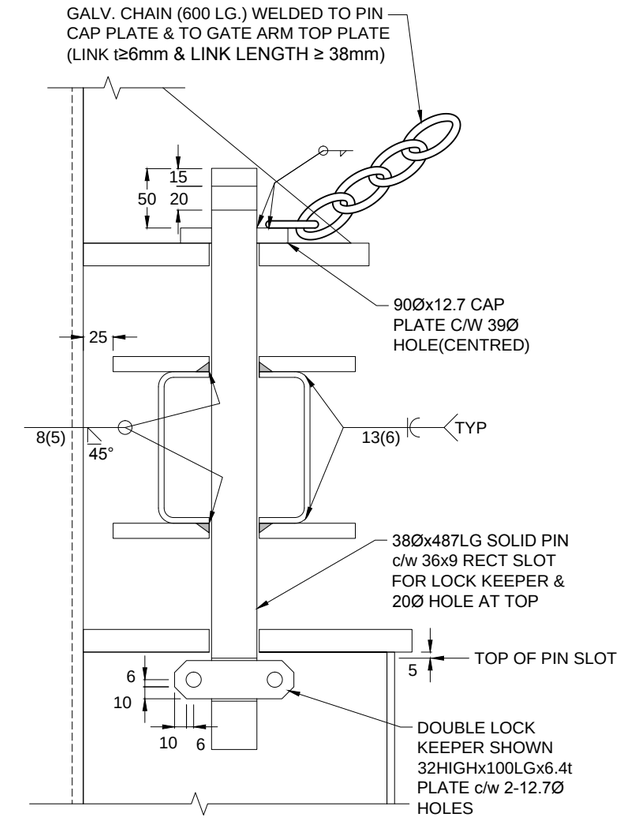

MISC. LATCHING PIN & GATE ARM END DETAILS
1:5

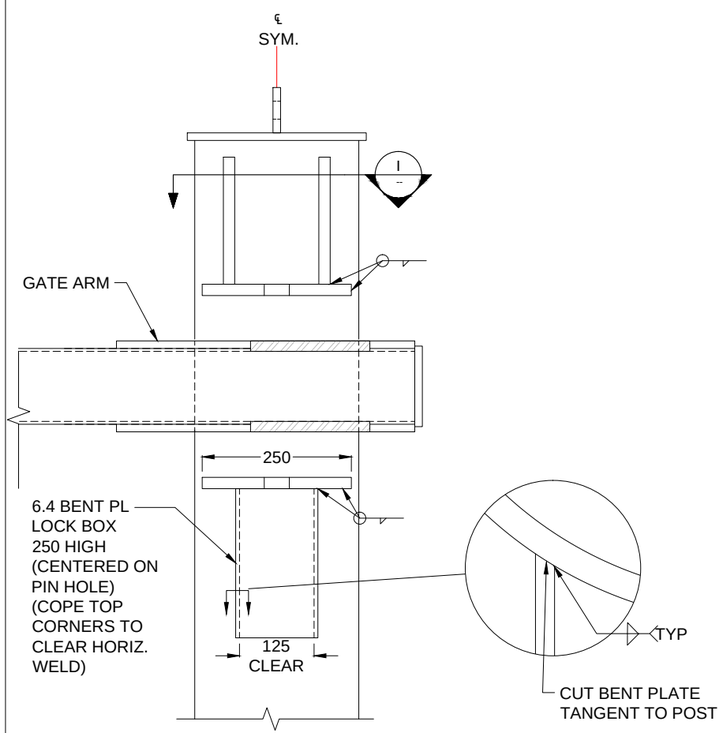

DETAIL 2/01 : LATCH POST - SIDE ELEV.
(PIN NOT SHOWN FOR CLARITY)
1:10

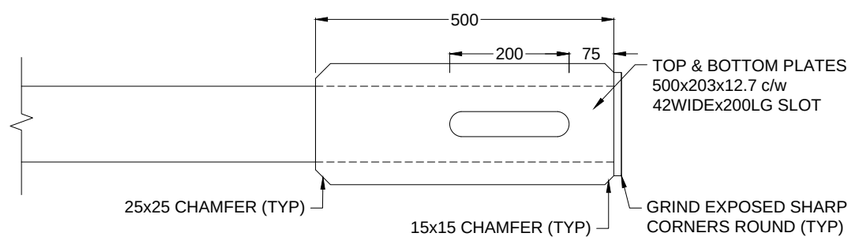

GATE ARM LATCH END - PLAN
1:10

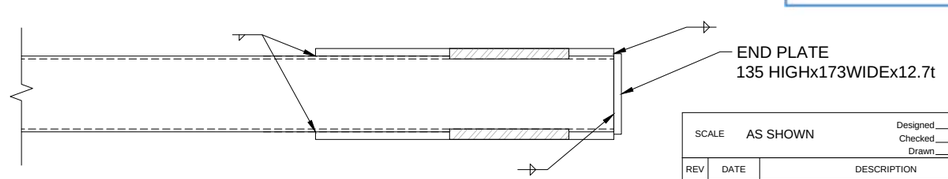

DETAIL 1/01 : GATE ARM LATCH END - ELEV.
1:10

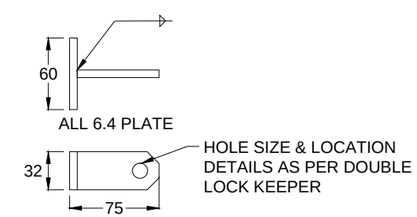

ALTERNATE SINGLE LOCK KEEPER DETAILS
1:5

ASSUME NOT TO SCALE

ORIGINAL SIGNED AND SEALED

SCALE	AS SHOWN	Designed M.P.	Date June 1, 2017
		Checked G.M.	Date June 1, 2017
		Drawn N.H.	Date June 1, 2017

REV	DATE	DESCRIPTION	INITAL

REVISIONS

BRITISH COLUMBIA
MINISTRY OF FORESTS, LANDS AND NATURAL RESOURCE OPERATIONS

STANDARD GATE DRAWING

STANDARD BURIED FOOTING ROAD CLOSURE GATE - DWG. 4 OF 4

ORIGINAL SIGNED and SEALED BY: M. PENNER, P.ENG.

APPROVED BY: B. CHOW, P.ENG. CHIEF ENGINEER

FILE NUMBER:

DRAWING NUMBER: STD-G-011-04 | 0