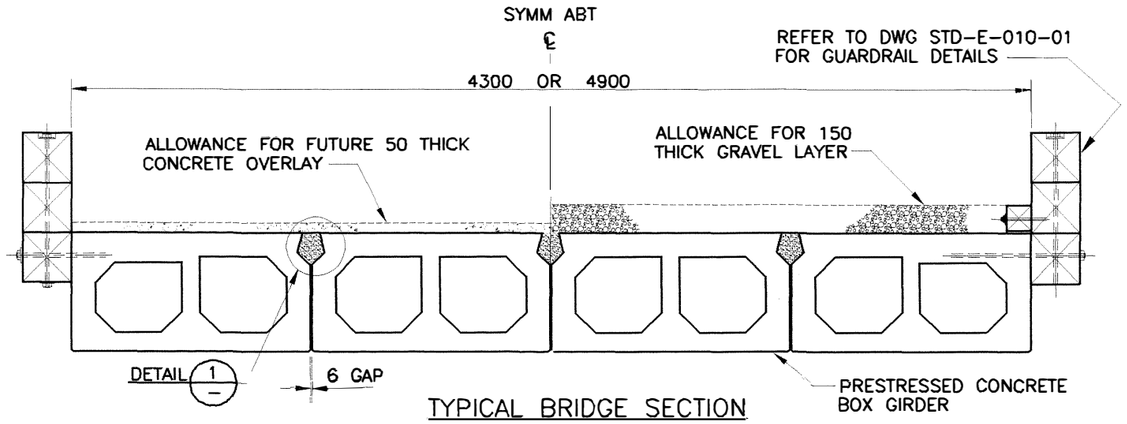

TYPICAL BRIDGE SECTION
1:30

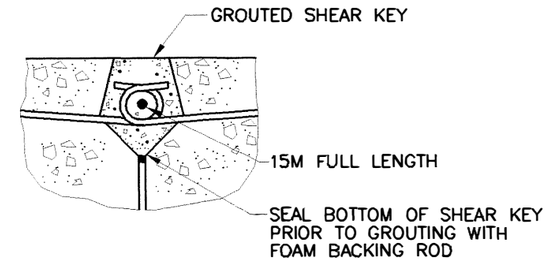

DETAIL 1 GROUTED SHEAR KEY
1:10

1. GENERAL

1.1 PRESTRESSED CONCRETE BOX GIRDERS HAVE BEEN DESIGNED FOR SPANS IN EXCESS OF THE COST EFFICIENT SPANS FOR PRESTRESSED CONCRETE SLAB GIRDERS (DRAWINGS STD-E-080 SERIES) AND REINFORCED CONCRETE SLAB GIRDERS (DRAWINGS STD-E-070 SERIES)

1.2 BRIDGE TO BE CLEARLY AND PERMANENTLY IDENTIFIED IN ACCORDANCE WITH SECTION 4.3 OF FOREST SERVICE BRIDGE DESIGN AND CONSTRUCTION MANUAL. LETTERING TO BE AT LEAST 50mm HIGH.

2. DESIGN CRITERIA

2.1 DESIGN CONFORMS TO CAN/CSA-S6-88 "DESIGN OF HIGHWAY BRIDGES" WITH VARIATIONS LIMITED TO SECTION 3 OF FOREST SERVICE BRIDGE DESIGN AND CONSTRUCTION MANUAL.

2.2 DESIGN VEHICLES ARE L-75, L-100 L-150 OR L-165 DESIGN LOGGING TRUCKS. REFER TO FOREST SERVICE BRIDGE DESIGN AND CONSTRUCTION MANUAL FOR DESIGN VEHICLE LOADING DETAILS.

2.3 DESIGN VEHICLES HAVE TWO LIMITING LATERAL ECCENTRICITIES:
- E1: 400mm OFF CENTERLINE
- E2: OUTSIDE WHEEL 600mm FROM GUARDRAIL

2.4 LIMIT STATE LOAD CASES FOR E1 AND E2:
- SERVICEABILITY: E1 (EXCEPT FATIGUE)
- ULTIMATE: E1 AND E2

2.5 ONE LINE OF WHEELS ASSUMED TO BE 60% OF TOTAL AXLE WEIGHT FOR E1 AND E2.

2.6 DYNAMIC LOAD ALLOWANCE 30%.

2.7 FATIGUE DESIGN IS FOR 500 000 CYCLES OF DESIGN VEHICLE ON BRIDGE CENTRELINE WITH BALANCED LOADING (50/50 WHEELS).

2.8 MAXIMUM GIRDER LIVE LOAD SERVICEABILITY LIMIT STATE DEFLECTION SPAN/450.

2.9 MAXIMUM SERVICEABILITY REINFORCEMENT FATIGUE STRESS RANGE 161 MPa (ONTARIO HIGHWAY BRIDGE DESIGN CODE CLAUSE C8-5.3.1 THIRD EDITION)

2.10 NO TENSILE IN-SERVICE STRESSES PERMITTED IN TOP FLANGE.

3. CONCRETE

3.1 REFER TO TABLE 8 (DWG 03) FOR CONCRETE STRENGTH AT 28 DAYS.

3.2 MINIMUM CONCRETE STRENGTH IS 30 MPa FOR RELEASE OF STRANDS, ERECTION OF GIRDERS OR PASSAGE OF UNLOADED LOGGING TRUCKS.

3.3 BOTTOM EDGES OF GIRDERS CHAMFERED 20mm.

3.4 TOP OF GIRDERS TO HAVE TRANSVERSE BROOM FINISH OR FLOAT FINISH AS SPECIFIED.

3.5 GIRDER ERECTION WEIGHTS BASED ON AVERAGE DENSITY OF 2500 kg/m^3.

3.6 HARDWARE GALVANIZING (WHERE SPECIFIED) - 2 COATS OF GALVACON.

4. GROUT

4.1 GROUT TO BE NON-SHRINK WITH MINIMUM 28 DAY STRENGTH OF 30 MPa.

4.2 USE TARGET PORTLAND EXPANDING GROUT OR APPROVED EQUAL FOR NORMAL TEMPERATURES (10 DEG C OR WARMER).

4.3 USE EMACO T415 GROUT OR APPROVED EQUAL FOR COLDER TEMPERATURES (COLDER THAN 10 DEG C).

4.4 GROUT TO BE PREBAGGED AND MIXED AND PLACED IN ACCORDANCE WITH MANUFACTURER'S PROCEDURES.

4.5 MAXIMUM AGGREGATE SIZE 10mm.

5. PRESTRESSING STEEL

5.1 ALL STRANDS TO BE 13mm DIA 7 WIRE UNCOATED LOW RELAXATION STRAND, 1862 MPa GRADE.

5.2 MINIMUM STRAND ULTIMATE TENSILE STRENGTH 184 KN/STRAND.

5.3 STRAND FORCE IMMEDIATELY AFTER RELEASE 138 KN/STRAND.

5.4 FULLY BONDED STRANDS USED. DEBONDING MAY BE USED WHEN APPROVED.

5.5 EXPOSED ENDS OF STRAND TO BE COATED WITH TWO COATS OF GALVACON.

6. REINFORCING STEEL

6.1 REINFORCING STEEL TO BE DEFORMED BARS CONFORMING TO CSA G30.18 GRADE 400.

6.2 NO WELDING OR MECHANICAL SPLICING OF REINFORCING PERMITTED.

6.3 LONGITUDINAL BAR SPLICES TO BE STAGGERED SO THAT NO MORE THAN EVERY THIRD BAR IS SPLICED AT ANY GIVEN SECTION.

7. TRANSPORTATION AND ERECTION

7.1 GIRDERS MUST BE TRANSPORTED AND HANDLED WITH GIRDER TOP FLANGE (SHEAR KEYS) ALWAYS FACING UPWARDS. MANUFACTURER TO CHECK HANDLING STRESSES.

7.2 GIRDERS MUST BE SUPPORTED WITHIN 1 METRE OF BEARING LOCATIONS DURING TRANSPORTATION, STORAGE AND ERECTION (NO LAUNCHING)

7.3 LIFTING DEVICES SHALL COMPRISE LIFTING LOOPS OF 13mm DIA PRESTRESSING STRAND, 1862 MPa GRADE. STRAND TO BE CUT OFF 50mm BELOW CONCRETE SURFACE AND COATED WITH TWO COATS OF GALVACON. HOLE AROUND STRAND TO BE GROUTED. ALTERNATE LIFTING DEVICES MUST BE APPROVED PRIOR TO USE.

7.4 ONLY LOW IMPACT LIFTS ARE PERMITTED. ANGLE OF LIFT MUST NOT EXCEED 30 DEGREES FROM VERTICAL.

ASSUME NOT TO SCALE

Rev	Date	Description	Init

ISSUE RECORD

SCALE

DESIGNED GWT DATE MAR/99
CHECKED GWT DATE MAR/99
DRAWN DG DATE MAR/99

Rev	Date	Description	Init

REVISIONS

Province of British Columbia
MINISTRY OF FORESTS
RESOURCE TENURES AND ENGINEERING BRANCH

STANDARD BRIDGE DRAWING

PRECAST PRESTRESSED CONCRETE BOX GIRDERS
GENERAL NOTES

ORIGINAL SIGNED AND SEALED BY: GRAHAM W. TAYLOR, P.ENG.
DESIGN ENGINEER GRAHAM W. TAYLOR, P.ENG.
DATE
FILE No.

APPROVED BY: R.D. Davis June/99
MOF ENGINEER
DATE
DRAWING No. STD-E-060-01 A

CANCEL PRINTS BEARING PREVIOUS LETTER

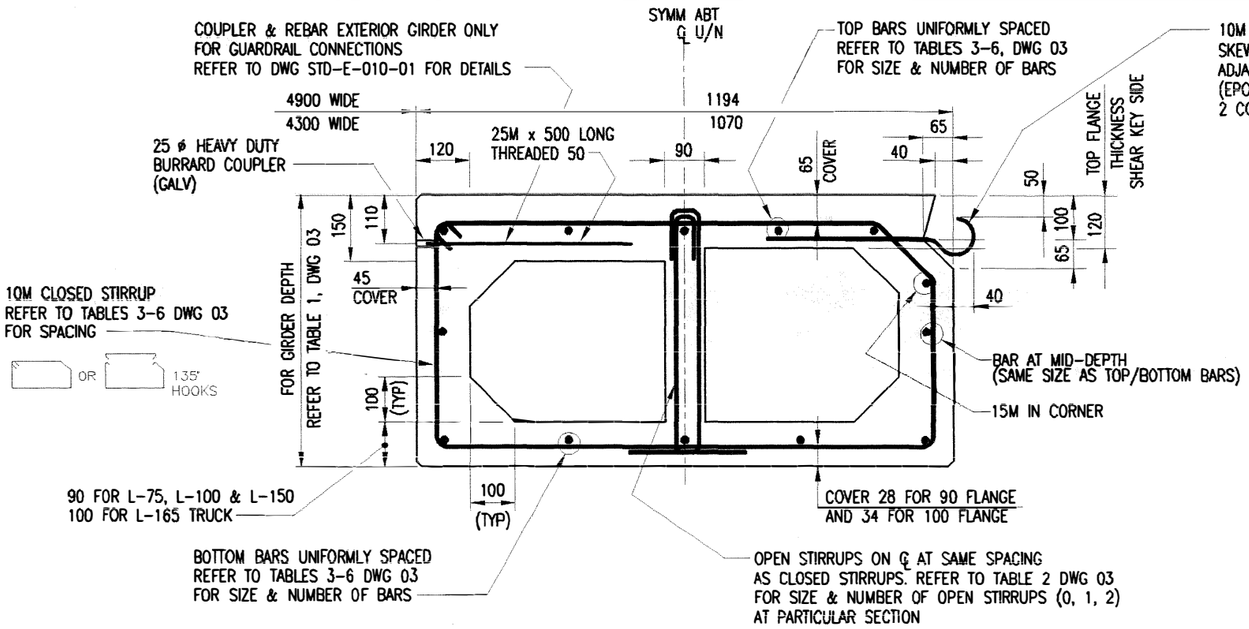

TYPICAL EXTERIOR GIRDER
1:12.5

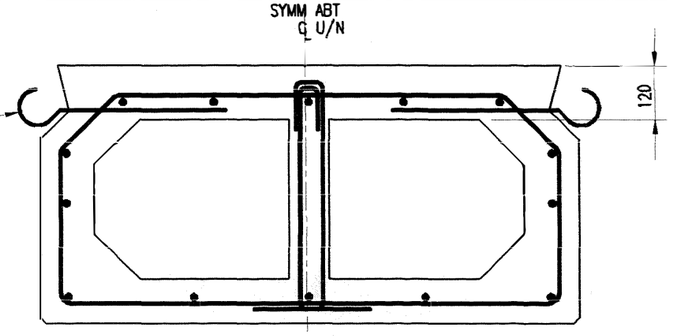

TYPICAL INTERIOR GIRDER
1:12.5

SIMILAR TO EXTERIOR GIRDER
EXCEPT AS SHOWN

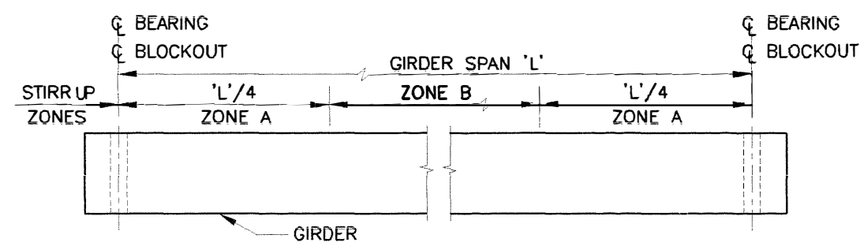

ELEVATION – GIRDER STIRRUP ZONES
1:12.5

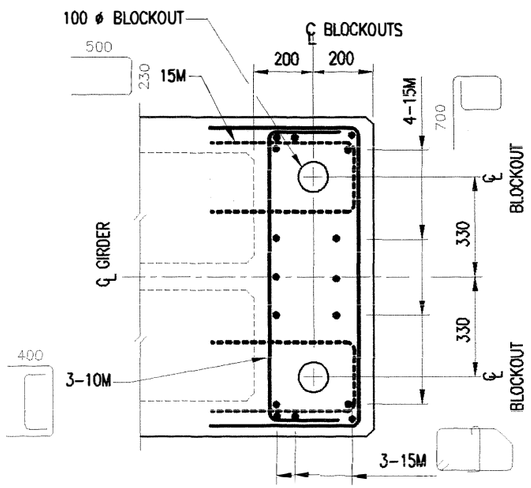

PLAN – END GIRDER DETAILS
1:20

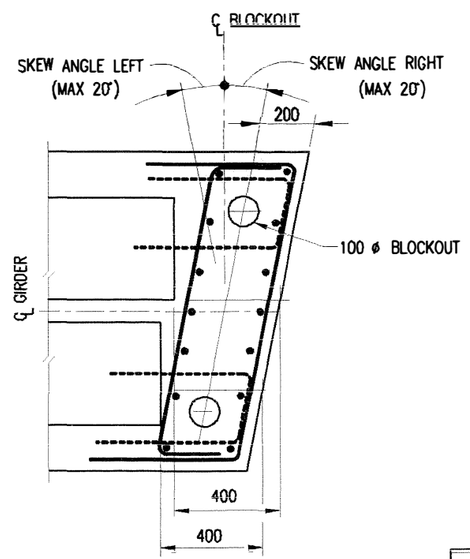

PLAN – SKEWED END GIRDER DETAILS
1:20

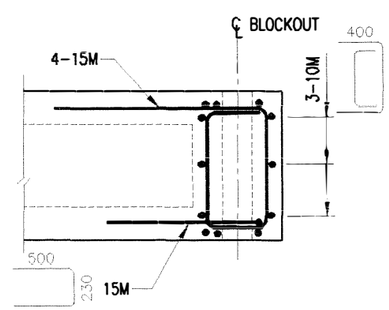

ELEVATION – END GIRDER DETAILS
1:20

ASSUME NOT TO SCALE

NOTE:

ALTERNATIVE BLOCKOUT DETAILS
MAY BE USED WHERE APPROVED

Rev	Date	Description	Init

ISSUE RECORD

SCALE

DESIGNED GWT DATE MAR/99
CHECKED GWT DATE MAR/99
DRAWN DG DATE MAR/99

Rev	Date	Description	Init

REVISIONS

Province of British Columbia
MINISTRY OF FORESTS
RESOURCE TENURES AND ENGINEERING BRANCH

STANDARD BRIDGE DRAWING

PRECAST PRESTRESSED CONCRETE BOX GIRDERS
GIRDER DETAILS – SHEET 1

ORIGINAL SIGNED AND SEALED BY: GRAHAM W. TAYLOR, P.ENG.
APPROVED BY: June/99
DESIGN ENGINEER GRAHAM W. TAYLOR, P.ENG.
MOF ENGINEER
DATE
DATE
FILE No.
DRAWING No. STD-E-060-02 A

CANCEL PRINTS BEARING PREVIOUS LETTER

TABLE 1 – GIRDER DEPTH (mm)				
SPAN (m)	L–75	L–100	L–150	L–165
10	500	500	500	600
11	500	500	500	600
12	500	500	600	600
13	500	500	600	600
14	500	500	600	700
15	600	600	700	700
16	600	600	700	700
17	600	600	700	
18	600	700		

TABLE 2 – SIZE & NUMBER OF OPEN STIRRUPS/SECTION					
SPAN (m)	STIRRUP ZONE	L–75	L–100	L–150	L–165
10	ZONE A	–	1–10M	2–15M	2–15M
	ZONE B	–	–	1–15M	1–15M
11	ZONE A	–	1–10M	2–15M	2–15M
	ZONE B	–	–	1–15M	1–15M
12	ZONE A	–	1–10M	2–15M	2–15M
	ZONE B	–	–	1–15M	1–15M
13	ZONE A	–	1–10M	2–15M	2–15M
	ZONE B	–	–	1–15M	1–15M
14	ZONE A	–	1–10M	2–15M	2–15M
	ZONE B	–	–	1–15M	1–15M
15	ZONE A	–	1–10M	2–15M	2–15M
	ZONE B	–	–	1–15M	1–15M
16	ZONE A	–	1–10M	2–15M	2–15M
	ZONE B	–	–	1–15M	1–15M
17	ZONE A	–	–	2–15M	
	ZONE B	–	–	1–15M	
18	ZONE A	–	–		
	ZONE B	–	1–10M		

TABLE 8 – GIRDER 28 DAY CONCRETE STRENGTH				
SPAN (m)	L–75	L–100	L–150	L–165
10	40	40	40	40
11	40	40	40	40
12	40	40	40	40
13	40	40	40	45
14	40	45	45	40
15	40	40	40	45
16	40	40	40	50
17	40	45	45	
18	45	40		

ASSUME NOT TO SCALE

TABLE 3 – L–75 TRUCK						
SPAN (m)	NO. OF STRANDS	TOP/BOTTOM BARS	STIRRUP SPACING		GIRDER WEIGHT (kg)	
			ZONE A	ZONE B	4300 WIDE	4900 WIDE
10	13	5–20M	250	290	9050	9800
11	16	5–20M	250	290	9880	10700
12	18	5–20M	250	270	10710	11590
13	20	5–20M	250	260	11550	12490
14	23	5–20M	250	250	12380	13390
15	21	6–20M	210	210	14630	15730
16	23	6–20M	250	250	15550	16710
17	26	6–20M	250	250	16460	17690
18	29	6–20M	190	190	17380	18670

TABLE 4 – L–100 TRUCK						
SPAN (m)	NO. OF STRANDS	TOP/BOTTOM BARS	STIRRUP SPACING		GIRDER WEIGHT (kg)	
			ZONE A	ZONE B	4300 WIDE	4900 WIDE
10	16	6–20M	200	250	9050	9800
11	18	6–20M	200	230	9880	10700
12	21	6–20M	190	220	10710	11590
13	24	6–20M	190	220	11550	12490
14	27	6–20M	190	220	12380	13390
15	24	6–20M	250	250	14630	15730
16	27	6–20M	250	250	15550	16710
17	30	6–20M	170	170	16460	17690
18	29	7–20M	200	200	19040	20360

TABLE 5 – L–150 TRUCK						
SPAN (m)	NO. OF STRANDS	TOP/BOTTOM BARS	STIRRUP SPACING		GIRDER WEIGHT (kg)	
			ZONE A	ZONE B	4300 WIDE	4900 WIDE
10	22	6–20M	180	180	9050	9800
11	25	6–20M	180	180	9880	10700
12	23	6–20M	230	230	11880	12790
13	26	6–20M	230	230	12800	13770
14	29	6–20M	230	230	13720	14750
15	27	7–20M	200	200	16050	17170
16	30	7–20M	200	200	17050	18240
17	33	5–25M	200	200	18040	19300

TABLE 6 – L–165 TRUCK						
SPAN (m)	NO. OF STRANDS	TOP/BOTTOM BARS	STIRRUP SPACING		GIRDER WEIGHT (kg)	
			ZONE A	ZONE B	4300 WIDE	4900 WIDE
10	22	6–20M	170	170	10230	11010
11	25	6–20M	170	170	11170	12000
12	28	6–20M	170	170	12100	13000
13	31	6–20M	170	170	13000	14000
14	29	7–20M	200	280	15300	16360
15	32	5–25M	200	200	16320	17440
16	36	5–25M	190	190	17330	18520

NOTE: TOP/BOTTOM BARS IN TABLES 3–6 ARE NUMBER AND SIZE OF BARS IN EACH FLANGE

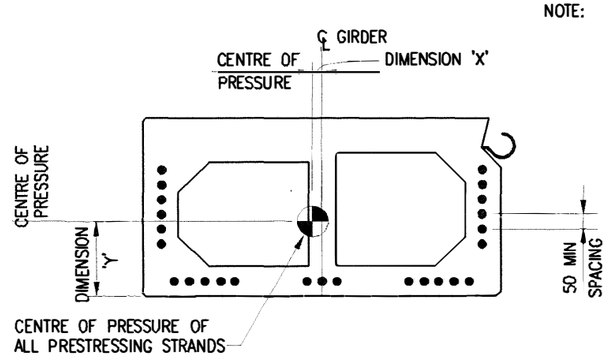

TABLE 7 – LOCATION OF PRESTRESS CENTRE OF PRESSURE (mm)					
GIRDER DEPTH (mm)	BTM FLANGE THK (mm)	EXTERIOR GIRDER		INTERIOR GIRDER	
		'X'	'Y'	'X'	'Y'
500	90	7	153	0	149
600	90	7	177	0	172
700	90	6	201	0	197
700	100	6	199	0	194

PRESTRESS STRAND LAYOUT

Rev	Date	Description	Init

ISSUE RECORD

SCALE

DESIGNED GWT DATE MAR/99
CHECKED GWT DATE MAR/99
DRAWN DG DATE MAR/99

Rev	Date	Description	Init

REVISIONS

Province of British Columbia
MINISTRY OF FORESTS
RESOURCE TENURES AND ENGINEERING BRANCH

STANDARD BRIDGE DRAWING

PRECAST PRESTRESSED CONCRETE BOX GIRDERS
GIRDER DETAILS – SHEET 2

ORIGINAL SIGNED AND SEALED BY: GRAHAM W. TAYLOR, P.ENG.
DESIGN ENGINEER GRAHAM W. TAYLOR, P.ENG.
DATE
FILE No.

APPROVED BY: June/94
MOF ENGINEER
DATE
DRAWING No. STD–E–060–03 A

CANCEL PRINTS BEARING PREVIOUS LETTER