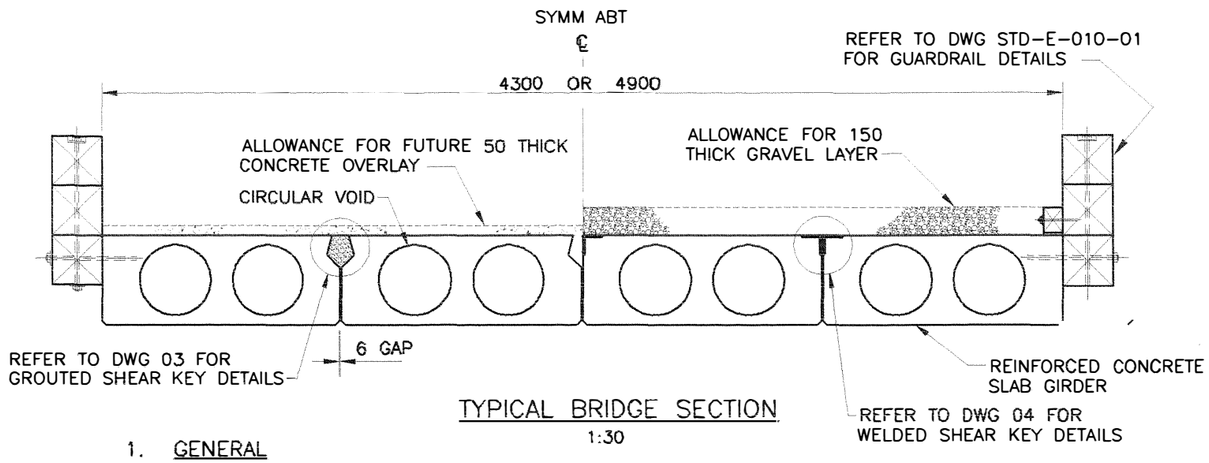

TYPICAL BRIDGE SECTION
1:30

1. GENERAL

1.1 THESE PRESTRESSED CONCRETE SLAB GIRDER DRAWINGS ILLUSTRATE THE FOLLOWING PRIMARY GIRDER VARIATION (ALL BRIDGES HAVE 4 GIRDERS):

- BRIDGE WIDTH: 4.3m OR 4.9m
- SHEAR KEYS: GROUTED OR FIELD WELDED OR NO SHEAR KEYS.

1.2 ALL GIRDERS HAVE TWO VOIDS/GIRDER.

1.3 BRIDGE TO BE CLEARLY AND PERMANENTLY IDENTIFIED IN ACCORDANCE WITH SECTION 4.3 OF FOREST SERVICE BRIDGE DESIGN AND CONSTRUCTION MANUAL. LETTERING TO BE AT LEAST 50mm HIGH.

2. DESIGN CRITERIA

2.1 DESIGN CONFORMS TO CAN/CSA-S6-88 "DESIGN OF HIGHWAY BRIDGES" WITH VARIATIONS LIMITED TO SECTION 3 OF FOREST SERVICE BRIDGE DESIGN AND CONSTRUCTION HANDBOOK.

2.2 DESIGN VEHICLES ARE L-75, L-100 L-150 OR L-165 DESIGN LOGGING TRUCKS. REFER TO FOREST SERVICE BRIDGE DESIGN AND CONSTRUCTION MANUAL FOR DESIGN VEHICLE LOADING DETAILS.

2.3 DESIGN VEHICLES HAVE TWO LIMITING LATERAL ECCENTRICITIES:

- E1: 400mm OFF CENTERLINE
- E2: OUTSIDE WHEEL 600mm FROM GUARDRAIL

2.4 LIMIT STATE LOAD CASES FOR E1 AND E2:

- SERVICEABILITY: E1 (EXCEPT FATIGUE)
- ULTIMATE: E1 AND E2

2.5 ONE LINE OF WHEELS ASSUMED TO BE 60% OF TOTAL AXLE WEIGHT FOR E1 AND E2.

2.6 DYNAMIC LOAD ALLOWANCE 30%.

2.7 FATIGUE DESIGN IS FOR 500,000 CYCLES OF DESIGN VEHICLE ON BRIDGE CENTRELINE WITH BALANCED LOADING (50/50 WHEELS).

2.8 MAXIMUM GIRDER LIVE LOAD SERVICEABILITY LIMIT STATE DEFLECTION SPAN/350. MAXIMUM DIFFERENTIAL DEFLECTION BETWEEN ADJACENT GIRDERS WITH NO SHEAR KEYS IS 30mm.

2.9 MAXIMUM SERVICEABILITY REINFORCEMENT FATIGUE STRESS RANGE 161 MPa (ONTARIO HIGHWAY BRIDGE DESIGN CODE CLAUSE C8-5.3.1 THIRD EDITION)

2.10 NO TENSILE IN-SERVICE STRESSES PERMITTED IN TOP FLANGE.

2.11 GIRDERS WITH WELDED SHEAR KEYS DESIGNED TO CARRY ONE LINE OF WHEELS (60% TOTAL AXLE WEIGHT) IN THE EVENT OF FAILURE OF SHEAR KEY WELDS.

2.12 THE SERVICEABILITY LIFE OF THE WELDED SHEAR KEYS IS UNCERTAIN AND WILL PROBABLY BE LESS THAN 50 YEARS. WELDS SHOULD BE INSPECTED REGULARLY AND WELD FAILURES REPAIRED.

ASSUME NOT TO SCALE

3. CONCRETE

3.1 REFER TO TABLE 2 (DWG 03), TABLE 10 (DWG 04) AND TABLE 18 (DWG 05). FOR CONCRETE STRENGTH AT 28 DAYS.

3.2 MINIMUM CONCRETE STRENGTH IS 30 MPa FOR RELEASE OF STRANDS, ERECTION OF GIRDERS OR PASSAGE OF UNLOADED LOGGING TRUCKS.

3.3 BOTTOM EDGES OF GIRDERS CHAMFERED 20mm.

3.4 TOP OF GIRDERS TO HAVE TRANSVERSE BROOM FINISH OR FLOAT FINISH AS SPECIFIED.

3.5 GIRDER ERECTION WEIGHTS BASED ON AVERAGE DENSITY OF 2500 kg/m^3.

3.6 HARDWARE GALVANIZING (WHERE SPECIFIED) – 2 COATS OF GALVACON.

4. GROUT

4.1 GROUT TO BE NON-SHRINK WITH MINIMUM 28 DAY STRENGTH OF 30 MPa.

4.2 USE TARGET PORTLAND EXPANDING GROUT OR APPROVED EQUAL FOR NORMAL TEMPERATURES (10 DEG C OR WARMER).

4.3 USE EMACO T415 GROUT OR APPROVED EQUAL FOR COLDER TEMPERATURES (COLDER THAN 10 DEG C).

4.4 GROUT TO BE PREBAGGED AND MIXED AND PLACED IN ACCORDANCE WITH MANUFACTURER'S PROCEDURES.

4.5 MAXIMUM AGGREGATE SIZE 10mm.

5. PRESTRESSING STEEL

5.1 ALL STRANDS TO BE 13mm DIA LOW RELAXATION STRAND, 1862 MPa GRADE.

5.2 MINIMUM STRAND ULTIMATE TENSILE STRENGTH 184 KN/STRAND.

5.3 STRAND FORCE IMMEDIATELY AFTER RELEASE 138 KN/STRAND.

5.4 FULLY BONDED STRANDS USED. DEBONDING MAY BE USED WHEN APPROVED.

5.5 EXPOSED ENDS OF STRAND TO BE COATED WITH TWO COATS OF GALVACON.

6. REINFORCING STEEL

6.1 REINFORCING STEEL TO BE DEFORMED BARS CONFORMING TO CSA G30.18 GRADE 400.

6.2 NO WELDING OR MECHANICAL SPLICING OF REINFORCING PERMITTED.

6.3 LONGITUDINAL BAR SPLICES TO BE STAGGERED SO THAT NO MORE THAN EVERY THIRD BAR IS SPLICED AT ANY GIVEN SECTION.

7. TRANSPORTATION AND ERECTION

7.1 GIRDERS TRANSPORTED AND HANDLED WITH GIRDER TOP FLANGE (SHEAR KEYS) ALWAYS FACING UPWARDS. MANUFACTURER TO CHECK HANDLING STRESSES.

7.2 GIRDERS MUST BE SUPPORTED WITHIN 1 METRE OF BEARING LOCATIONS DURING TRANSPORTATION, STORAGE AND ERECTION (NO LAUNCHING).

7.3 LIFTING DEVICES SHALL COMPRISE LIFTING LOOPS OF 13mm DIA PRESTRESSING STRAND, 1862 MPa GRADE. STRAND TO BE CUT OFF 50mm BELOW CONCRETE SURFACE AND COATED WITH TWO COATS OF GALVACON. HOLE AROUND STRAND TO BE GROUTED. ALTERNATIVE LIFTING DEVICES MUST BE APPROVED PRIOR TO USE.

7.4 ONLY LOW IMPACT LIFTS ARE PERMITTED. ANGLE OF LIFT MUST NOT EXCEED 30 DEGREES FROM VERTICAL.

Rev	Date	Description	Init

ISSUE RECORD

SCALE

DESIGNED GWT DATE MAR/99
CHECKED GWT DATE MAR/99
DRAWN DG DATE MAR/99

Rev	Date	Description	Init

REVISIONS

Province of British Columbia
MINISTRY OF FORESTS
RESOURCE TENURES AND ENGINEERING BRANCH

STANDARD BRIDGE DRAWING

PRECAST PRESTRESSED CONCRETE SLAB GIRDERS
GENERAL NOTES

ORIGINAL SIGNED AND SEALED BY: GRAHAM W. TAYLOR, P.ENG.
DESIGN ENGINEER GRAHAM W. TAYLOR, P.ENG.
DATE
FILE No.
APPROVED BY: June/99
MOF ENGINEER
DATE
DRAWING No. STD-E-080-01 A

CANCEL PRINTS BEARING PREVIOUS LETTER

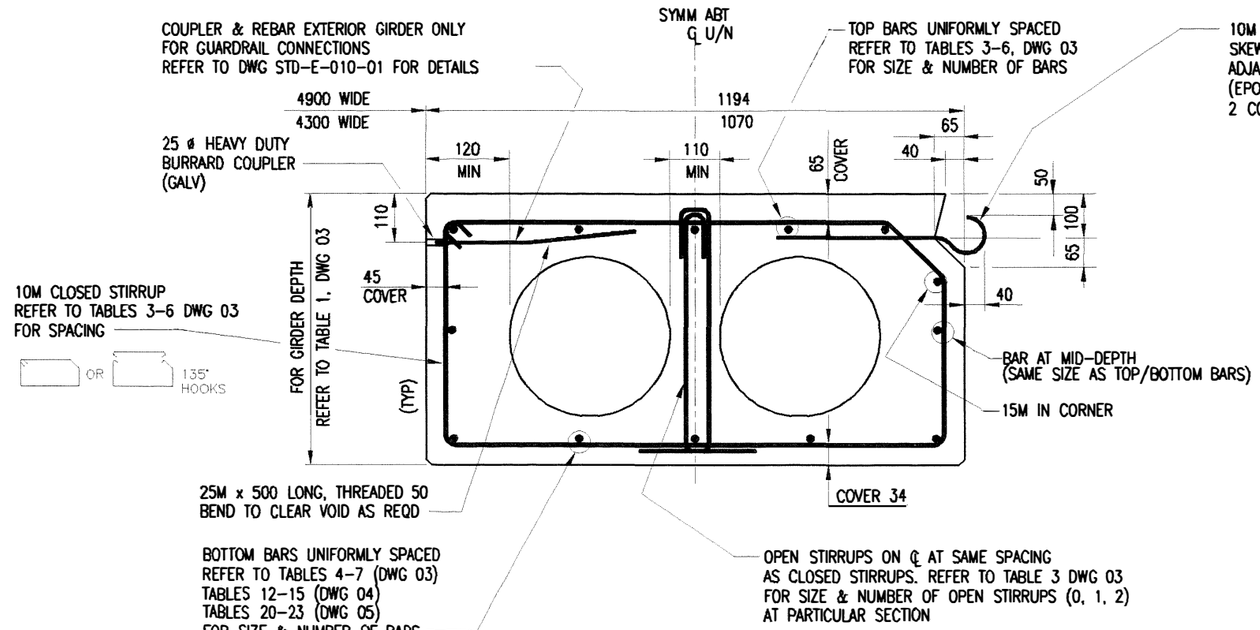

TYPICAL EXTERIOR GIRDER
1:12.5

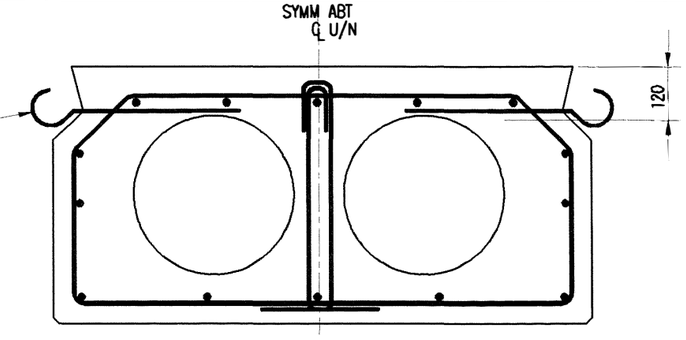

TYPICAL INTERIOR GIRDER
1:12.5

SIMILAR TO EXTERIOR GIRDER
EXCEPT AS SHOWN

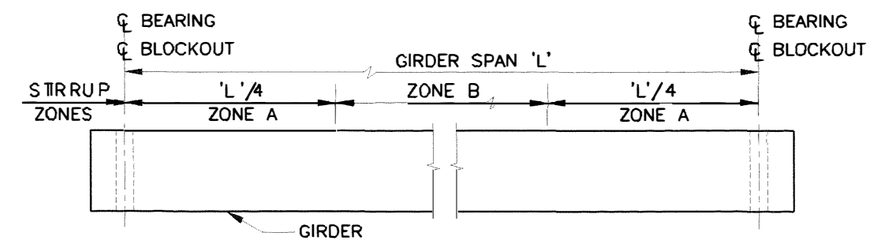

ELEVATION – GIRDER STIRRUP ZONES
1:12.5

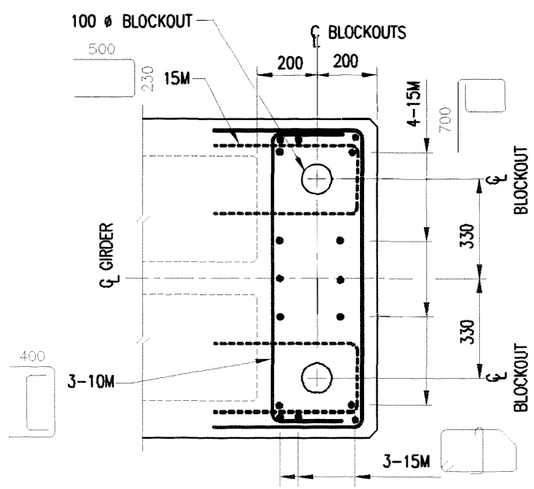

PLAN – END GIRDER DETAILS
1:20

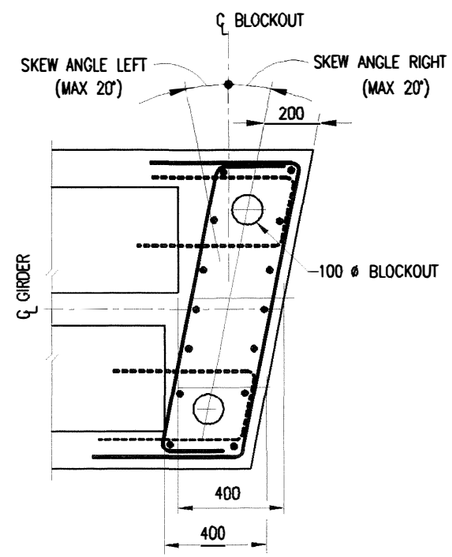

PLAN – SKEWED END GIRDER DETAILS
1:20

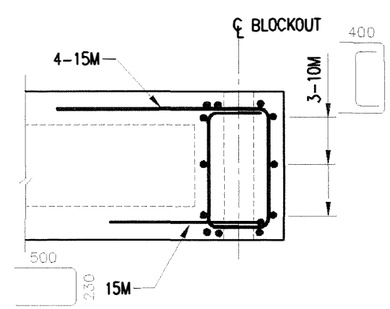

ELEVATION – END GIRDER DETAILS
1:20

ASSUME NOT TO SCALE

NOTE:

ALTERNATIVE BLOCKOUT DETAILS
MAY BE USED WHERE APPROVED

Rev	Date	Description	Init

ISSUE RECORD

SCALE

DESIGNED GWT DATE MAR/99
CHECKED GWT DATE MAR/99
DRAWN DG DATE MAR/99

Rev	Date	Description	Init

REVISIONS

Province of British Columbia
MINISTRY OF FORESTS
RESOURCE TENURES AND ENGINEERING BRANCH

STANDARD BRIDGE DRAWING

PRECAST PRESTRESSED CONCRETE SLAB GIRDERS
GIRDER DETAILS

ORIGINAL SIGNED AND SEALED BY: GRAHAM W. TAYLOR, P.ENG.
DESIGN ENGINEER: GRAHAM W. TAYLOR, P.ENG.
DATE:
FILE No.:

APPROVED BY: June/99
MOF ENGINEER
DATE:
DRAWING No.: STD-E-080-02 A

CANCEL PRINTS BEARING PREVIOUS LETTER

TABLE 1 – GIRDER DEPTH (mm) – GROUTED SHEAR KEY				
SPAN (m)	L–75	L–100	L–150	L–165
6	350	350	400	400
7	350	350	400	400
8	350	400	400	450
9	350	400	450	450
10	400	400	450	500
11	400	450	500	500
12	450	450	550	550
13	450	500	550	600
14	500	500	550	600

TABLE 2 – GIRDER 28 DAY CONCRETE STRENGTH – GROUTED SHEAR KEY				
SPAN (m)	L–75	L–100	L–150	L–165
6	40	40	40	45
7	40	40	45	50
8	40	40	50	45
9	50	45	40	50
10	40	50	50	45
11	50	40	45	50
12	40	50	40	45
13	50	40	45	45
14	45	50	50	50

TABLE 3 – SIZE & NUMBER OF OPEN STIRRUPS/SECTION – GROUTED SHEAR KEY					
SPAN (m)	STIRRUP ZONE	L–75	L–100	L–150	L–165
6	ZONE A	–	–	–	–
	ZONE B	–	–	2–10M	2–10M
7	ZONE A	–	–	–	–
	ZONE B	–	–	2–10M	2–10M
8	ZONE A	–	–	–	–
	ZONE B	–	–	2–10M	2–10M
9	ZONE A	–	–	–	–
	ZONE B	–	–	2–10M	2–10M
10	ZONE A	–	–	–	1–10M
	ZONE B	–	–	2–10M	2–10M
11	ZONE A	–	–	–	1–10M
	ZONE B	–	–	2–10M	2–10M
12	ZONE A	–	–	2–10M	2–10M
	ZONE B	–	–	2–10M	2–10M
13	ZONE A	–	–	2–10M	2–10M
	ZONE B	–	–	2–10M	2–10M
14	ZONE A	–	–	2–10M	2–10M
	ZONE B	–	–	2–10M	2–10M

TABLE 4 – L–75 TRUCK – GROUTED SHEAR KEYS						
SPAN (m)	NO. OF STRANDS	TOP/BOTTOM BARS	STIRRUP SPACING		GIRDER WEIGHT (kg)	
			ZONE A	ZONE B	4300 WIDE	4900 WIDE
6	13	4–15M	250	250	5370	6060
7	16	4–15M	230	230	6190	7000
8	19	4–15M	210	210	7020	7932
9	22	4–20M	200	200	7850	8870
10	22	4–20M	240	240	9380	10670
11	25	4–20M	230	230	10270	11690
12	24	4–20M	280	280	11780	13510
13	28	5–20M	260	260	12690	14560
14	27	5–20M	280	280	14030	16260

TABLE 5 – L–100 TRUCK – GROUTED SHEAR KEYS						
SPAN (m)	NO. OF STRANDS	TOP/BOTTOM BARS	STIRRUP SPACING		GIRDER WEIGHT (kg)	
			ZONE A	ZONE B	4300 WIDE	4900 WIDE
6	15	4–15M	160	160	5370	6060
7	19	4–15M	150	150	6190	7000
8	18	4–20M	170	170	7600	8650
9	22	4–20M	170	170	8490	9660
10	26	4–20M	170	170	9380	10670
11	25	4–20M	180	180	10830	12420
12	29	5–20M	190	190	11760	13490
13	28	5–20M	200	200	13070	15150
14	31	5–20M	200	200	14030	16260

TABLE 6 – L–150 TRUCK – GROUTED SHEAR KEYS						
SPAN (m)	NO. OF STRANDS	TOP/BOTTOM BARS	STIRRUP SPACING		GIRDER WEIGHT (kg)	
			ZONE A	ZONE B	4300 WIDE	4900 WIDE
6	18	4–15M	130	130	5820	6620
7	22	4–15M	120	120	6710	7630
8	26	4–20M	120	120	7600	8650
9	25	4–20M	120	120	8960	10280
10	30	4–20M	120	120	9900	11350
11	29	4–20M	140	140	11170	12930
12	28	4–20M	150	150	12240	14360
13	31	5–20M	150	150	13200	15480
14	35	5–20M	150	150	14150	16610

TABLE 7 – L–165 TRUCK – GROUTED SHEAR KEYS						
SPAN (m)	NO. OF STRANDS	TOP/BOTTOM BARS	STIRRUP SPACING		GIRDER WEIGHT (kg)	
			ZONE A	ZONE B	4300 WIDE	4900 WIDE
6	23	4–15M	100	100	5820	6620
7	27	4–20M	90	90	6710	7630
8	27	4–20M	100	100	8030	9200
9	31	4–20M	100	100	8960	10280
10	31	4–20M	100	100	10210	11820
11	35	4–20M	100	100	11170	12930
12	34	4–20M	110	110	12240	14360
13	35	4–20M	110	110	14990	17480
14	38	5–20M	120	120	16080	18760

NOTE: TOP/BOTTOM BARS IN TABLES 4–7 ARE NUMBER AND SIZE OF BARS IN EACH FLANGE

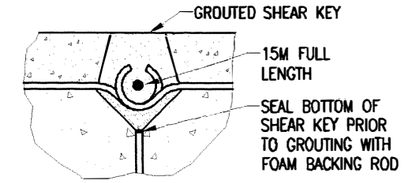

GROUTED SHEAR KEY DETAILS

1:5

ASSUME NOT TO SCALE

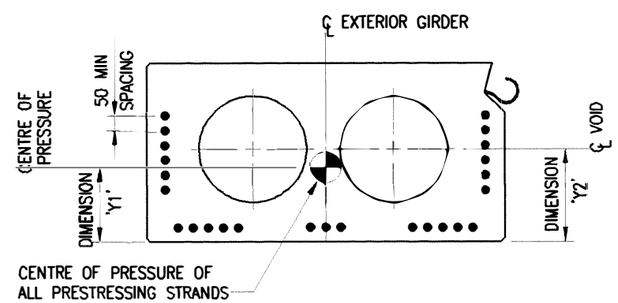

PRESTRESS STRAND LAYOUT

TABLE 8 – VOID & PRESTRESS STRAND DATA			
GIRDER DEPTH (mm)	VOIDS	DIMENSION 'Y1' (mm)	DIMENSION 'Y2' (mm)
350	2–152 ø	123	154
400	2–203 ø	137	178
450	2–254 ø	149	203
500	2–305 ø	161	225
550	2–356 ø	169	252
600	2–356 ø	177	300

Rev	Date	Description	Init

ISSUE RECORD

SCALE

DESIGNED GWT DATE MAR/99
CHECKED GWT DATE MAR/99
DRAWN DG DATE MAR/99

Rev	Date	Description	Init

REVISIONS

Province of British Columbia
MINISTRY OF FORESTS
RESOURCE TENURES AND ENGINEERING BRANCH

STANDARD BRIDGE DRAWING

PRECAST PRESTRESSED CONCRETE SLAB GIRDERS
GIRDER DETAILS – GROUTED SHEAR KEYS

ORIGINAL SIGNED AND SEALED BY: GRAHAM W. TAYLOR, P.ENG.
APPROVED BY: June/99
DESIGN ENGINEER GRAHAM W. TAYLOR, P.ENG.
MOF ENGINEER
DATE
DATE
FILE No.:
DRAWING No. STD–E–080–03 A

CANCEL PRINTS BEARING PREVIOUS LETTER

TABLE 9 – GIRDER DEPTH (mm) – WELDED SHEAR KEY				
SPAN (m)	L–75	L–100	L–150	L–165
6	400	400	400	450
7	400	400	450	500
8	400	400	500	550
9	400	450	550	600
10	450	450	550	600
11	450	500	600	
12	500	550	600	
13	550	550		
14	550	600		

TABLE 10 – GIRDER 28 DAY CONCRETE STRENGTH – WELDED SHEAR KEY				
SPAN (m)	L–75	L–100	L–150	L–165
6	40	40	45	50
7	40	45	45	45
8	45	50	45	45
9	50	45	40	45
10	45	50	50	50
11	50	50	45	
12	50	45	50	
13	45	50		
14	45	45		

TABLE 11 – SIZE & NUMBER OF OPEN STIRRUPS/SECTION – WELDED SHEAR KEY					
SPAN (m)	STIRRUP ZONE	L–75	L–100	L–150	L–165
6	ZONE A	–	–	–	–
	ZONE B	2–10M	2–15M	2–15M	2–15M
7	ZONE A	–	–	–	–
	ZONE B	2–10M	2–15M	2–15M	2–15M
8	ZONE A	–	–	–	–
	ZONE B	2–10M	2–15M	2–15M	2–15M
9	ZONE A	–	–	–	1–10M
	ZONE B	2–15M	2–15M	2–15M	2–15M
10	ZONE A	–	–	–	1–10M
	ZONE B	2–10M	2–15M	2–15M	2–15M
11	ZONE A	–	–	–	
	ZONE B	2–10M	2–15M	2–15M	
12	ZONE A	–	–	–	
	ZONE B	2–10M	2–15M	2–15M	
13	ZONE A	–	–		
	ZONE B	2–10M	2–15M		
14	ZONE A	–	–		
	ZONE B	2–10M	2–15M		

TABLE 12 – L–75 TRUCK – WELDED SHEAR KEYS						
SPAN (m)	NO. OF STRANDS	TOP/BOTTOM BARS	STIRRUP SPACING		GIRDER WEIGHT (kg)	
			ZONE A	ZONE B	4300 WIDE	4900 WIDE
6	12	4–20M	200	200	5820	6620
7	17	4–20M	180	180	6710	7630
8	23	4–20M	180	180	7600	8650
9	26	4–20M	180	180	8490	9659
10	28	4–20M	190	190	9900	11350
11	31	4–20M	180	180	10830	12420
12	33	5–20M	210	210	12120	14040
13	29	6–20M	210	210	13200	15480
14	33	6–20M	200	200	14150	16610

TABLE 14 – L–150 TRUCK – WELDED SHEAR KEYS						
SPAN (m)	NO. OF STRANDS	TOP/BOTTOM BARS	STIRRUP SPACING		GIRDER WEIGHT (kg)	
			ZONE A	ZONE B	4300 WIDE	4900 WIDE
6	23	4–25M	100	100	5820	6620
7	26	4–25M	110	110	7100	8130
8	28	4–25M	120	120	8300	9610
9	30	4–25M	130	130	9380	10980
10	36	4–25M	130	130	10330	12110
11	37	4–25M	140	140	12810	14930
12	43	5–25M	140	140	13900	16210

TABLE 13 – L–100 TRUCK – WELDED SHEAR KEYS						
SPAN (m)	NO. OF STRANDS	TOP/BOTTOM BARS	STIRRUP SPACING		GIRDER WEIGHT (kg)	
			ZONE A	ZONE B	4300 WIDE	4900 WIDE
6	15	4–20M	150	150	5820	6620
7	21	5–20M	150	150	6710	7630
8	26	5–20M	140	140	7600	8650
9	26	6–20M	160	160	8960	10280
10	31	4–25M	150	150	9900	11350
11	32	4–25M	170	170	1170	12930
12	32	4–25M	190	190	12240	14360
13	36	4–25M	180	180	13200	15480
14	38	4–25M	200	200	16080	18760

TABLE 15 – L–165 TRUCK – WELDED SHEAR KEYS						
SPAN (m)	NO. OF STRANDS	TOP/BOTTOM BARS	STIRRUP SPACING		GIRDER WEIGHT (kg)	
			ZONE A	ZONE B	4300 WIDE	4900 WIDE
6	26	4–25M	90	90	6170	7060
7	30	4–25M	100	100	7350	8500
8	33	4–25M	110	110	8420	9850
9	34	4–25M	110	110	10630	12380
10	40	5–25M	110	110	11723	13658

NOTE: TOP/BOTTOM BARS IN TABLES 12–15 ARE NUMBER AND SIZE OF BARS IN EACH FLANGE

TABLE 16 – VOID & PRESTRESS STRAND DATA			
GIRDER DEPTH (mm)	VOIDS	DIMENSION 'Y1' (mm)	DIMENSION 'Y2' (mm)
350	2–152 ø	123	154
400	2–203 ø	137	178
450	2–254 ø	149	203
500	2–305 ø	161	225
550	2–356 ø	169	252
600	2–356 ø	177	300

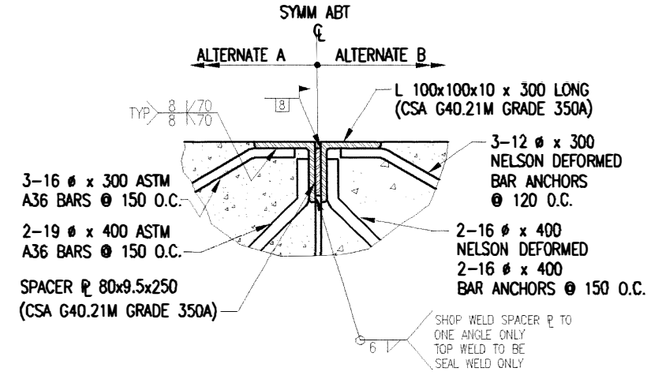

WELDED SHEAR KEY DETAILS
1:5

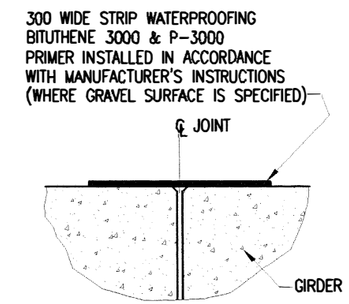

GIRDER JOINT DETAIL BETWEEN WELDED SHEAR KEYS
1:5

LOCATION AND SPACING OF WELDED SHEAR KEYS
- 500 FROM BEARINGS
- MIDSPAN
- MAX SPACING 3000

ASSUME NOT TO SCALE

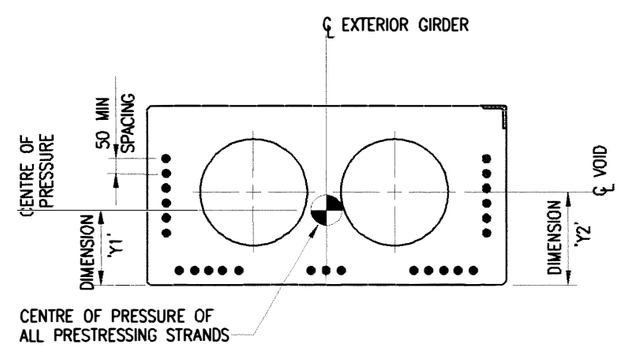

PRESTRESS STRAND LAYOUT

Rev	Date	Description	Init

ISSUE RECORD

SCALE

DESIGNED GWT DATE MAR/99
CHECKED GWT DATE MAR/99
DRAWN DG DATE MAR/99

Rev	Date	Description	Init

REVISIONS

Province of British Columbia
MINISTRY OF FORESTS
RESOURCE TENURES AND ENGINEERING BRANCH

STANDARD BRIDGE DRAWING

PRECAST PRESTRESSED CONCRETE SLAB GIRDERS
GIRDER DETAILS – WELDED SHEAR KEYS

ORIGINAL SIGNED AND SEALED BY: GRAHAM W. TAYLOR, P.ENG.
DESIGN ENGINEER GRAHAM W. TAYLOR, P.ENG.
DATE
FILE No.

APPROVED BY: June/99
MOF ENGINEER
DATE
DRAWING No. STD–E–080–04 A

CANCEL PRINTS BEARING PREVIOUS LETTER

TABLE 17 – GIRDER DEPTH (mm) – NO SHEAR KEY				
SPAN (m)	L–75	L–100	L–150	L–165
6	400	400	450	500
7	400	450	500	550
8	450	450	550	600
9	450	500	550	650
10	500	550	600	700
11	500	550		
12	550	600		
13	600			

TABLE 18 – GIRDER 28 DAY CONCRETE STRENGTH – NO SHEAR KEY				
SPAN (m)	L–75	L–100	L–150	L–165
6	40	45	45	45
7	45	40	45	45
8	40	50	40	45
9	50	45	50	45
10	40	40	50	45
11	50	45		
12	45	45		
13	45			

TABLE 19 – SIZE & NUMBER OF OPEN STIRRUPS/SECTION – NO SHEAR KEY					
SPAN (m)	STIRRUP ZONE	L–75	L–100	L–150	L–165
6	ZONE A	–	–	–	1–10M
	ZONE B	–	1–15M	2–15M	2–15M
7	ZONE A	–	–	–	1–10M
	ZONE B	–	1–15M	2–15M	2–15M
8	ZONE A	–	–	–	2–10M
	ZONE B	–	1–15M	2–15M	2–15M
9	ZONE A	–	–	–	2–10M
	ZONE B	–	1–15M	2–15M	2–15M
10	ZONE A	–	–	–	2–10M
	ZONE B	–	1–15M	2–15M	2–15M
11	ZONE A	–	–		
	ZONE B	–	1–15M		
12	ZONE A	–	–		
	ZONE B	–	1–15M		
13	ZONE A	–			
	ZONE B	–			

ASSUME NOT TO SCALE

TABLE 20 – L–75 TRUCK – NO SHEAR KEY						
SPAN (m)	NO. OF STRANDS	TOP/BOTTOM BARS	STIRRUP SPACING		GIRDER WEIGHT (kg)	
			ZONE A	ZONE B	4300 WIDE	4900 WIDE
6	18	4–20M	210	210	5830	6620
7	23	4–20M	210	210	6710	7630
8	23	4–20M	220	220	8030	9200
9	27	5–20M	220	220	8960	10280
10	27	5–20M	220	220	10210	11820
11	32	4–25M	240	240	11170	12930
12	31	4–25M	250	250	12240	14360
13	32	5–25M	290	290	14990	17480

TABLE 21 – L–100 TRUCK – NO SHEAR KEY						
SPAN (m)	NO. OF STRANDS	TOP/BOTTOM BARS	STIRRUP SPACING		GIRDER WEIGHT (kg)	
			ZONE A	ZONE B	4300 WIDE	4900 WIDE
6	22	4–20M	180	180	5820	6620
7	23	4–20M	200	200	7100	8130
8	28	5–20M	200	200	8030	9200
9	28	5–20M	220	220	9260	10720
10	28	5–20M	230	230	10330	12110
11	32	4–25M	230	230	11290	13230
12	34	4–25M	260	260	13900	16210

TABLE 22 – L–150 TRUCK – NO SHEAR KEY						
SPAN (m)	NO. OF STRANDS	TOP/BOTTOM BARS	STIRRUP SPACING		GIRDER WEIGHT (kg)	
			ZONE A	ZONE B	4300 WIDE	4900 WIDE
6	27	4–20M	140	140	6170	7060
7	28	4–20M	160	160	7350	8500
8	29	5–20M	170	170	8420	9850
9	34	4–25M	170	170	9380	10980
10	37	4–25M	200	200	11720	13660

TABLE 23 – L–165 TRUCK – NO SHEAR KEY						
SPAN (m)	NO. OF STRANDS	TOP/BOTTOM BARS	STIRRUP SPACING		GIRDER WEIGHT (kg)	
			ZONE A	ZONE B	4300 WIDE	4900 WIDE
6	29	5–20M	120	120	6400	7390
7	30	5–20M	130	130	7470	8730
8	33	5–20M	150	150	9550	11110
9	37	4–25M	160	160	11890	13790
10	41	4–25M	180	180	14510	16760

NOTE: TOP/BOTTOM BARS IN TABLES 20–23 ARE NUMBER AND SIZE OF BARS IN EACH FLANGE

TABLE 24 – VOID & PRESTRESS STRAND DATA			
GIRDER DEPTH (mm)	VOIDS	DIMENSION 'Y1' (mm)	DIMENSION 'Y2' (mm)
350	2–152 ø	123	154
400	2–203 ø	137	178
450	2–254 ø	149	203
500	2–305 ø	161	225
550	2–356 ø	169	252
600	2–356 ø	177	300
650	2–356 ø	193	325
700	2–356 ø	209	350

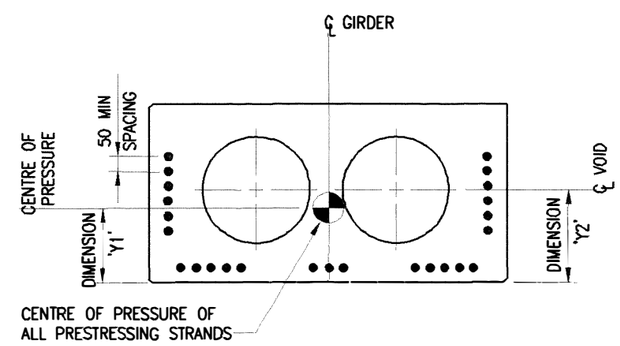

PRESTRESS STRAND LAYOUT

Rev	Date	Description	Init

ISSUE RECORD

SCALE

DESIGNED GWT DATE MAR/99
CHECKED GWT DATE MAR/99
DRAWN DG DATE MAR/99

Rev	Date	Description	Init

REVISIONS

Province of British Columbia
MINISTRY OF FORESTS
RESOURCE TENURES AND ENGINEERING BRANCH

STANDARD BRIDGE DRAWING

PRECAST PRESTRESSED CONCRETE SLAB GIRDERS
GIRDER DETAILS – NO SHEAR KEYS

ORIGINAL SIGNED AND SEALED BY: GRAHAM W. TAYLOR, P.ENG.
APPROVED BY: June/95
DESIGN ENGINEER GRAHAM W. TAYLOR, P.ENG.
MOF ENGINEER
DATE
DATE
FILE No.
DRAWING No. STD–E–080–05 A

CANCEL PRINTS BEARING PREVIOUS LETTER