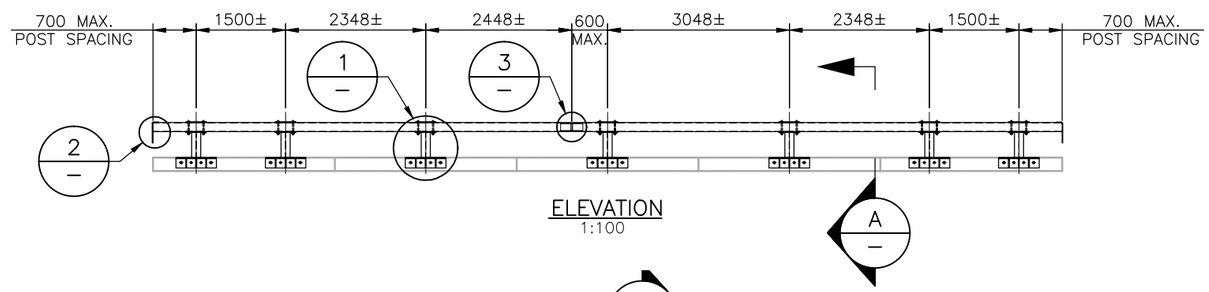

ELEVATION
1:100

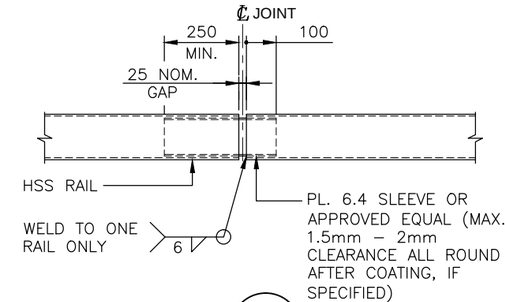

DETAIL 3
1:20

NOTE:
RAIL JOINT TO BE
600mm MAXIMUM
FROM POST CENTERLINE.

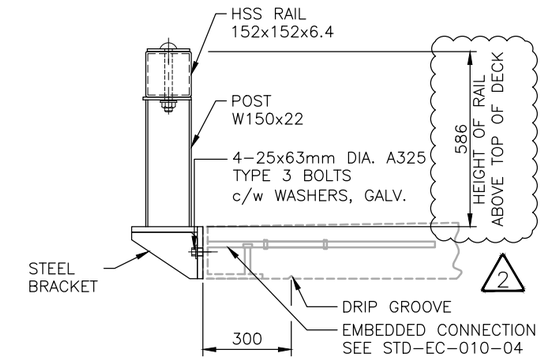

SECTION A
1:20

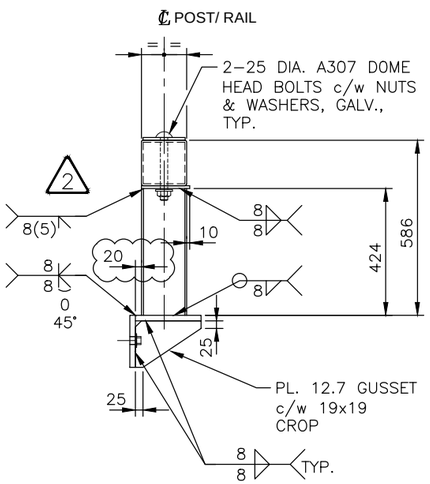

SECTION B
1:20

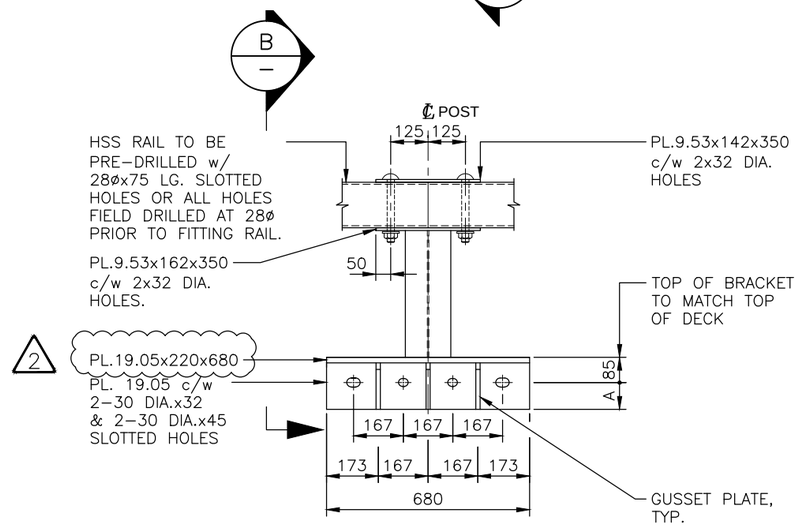

DETAIL 1
1:20

DECK THICKNESS	A
175	90
200	115
225	140

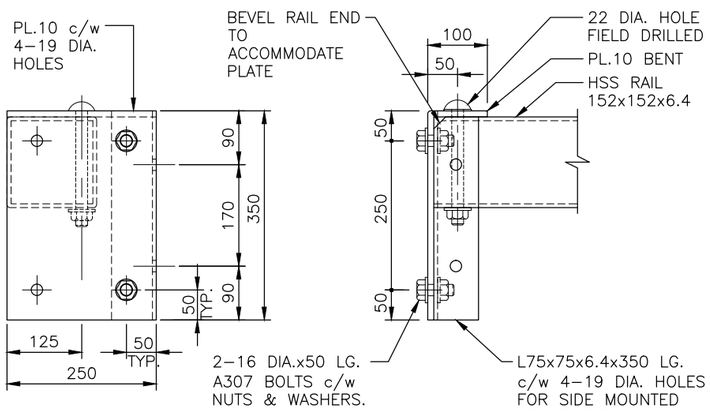

DETAIL 2
1:10

FOR SIDE MOUNTED DELINEATOR TAB OPTION

NOTE:
DELINEATOR ORIENTATION
BY OWNER

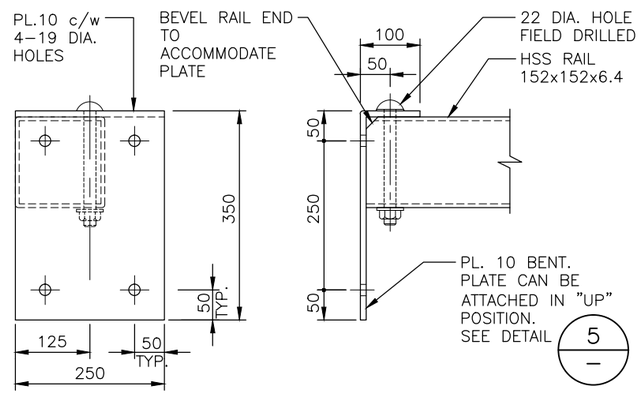

DETAIL 2
1:10

FOR FRONT MOUNTED DELINEATOR TAB OPTION

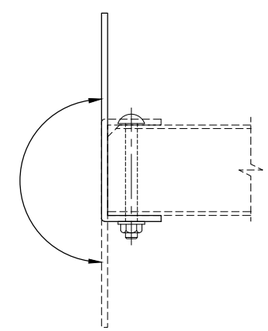

DETAIL 5
1:10

NOTES:

GENERAL

- GUARDRAILS HAVE BEEN DESIGNED TO MEET THE CRITERIA FOR CONTAINMENT LEVEL CL-3 AS DEFINED BY THE MINISTRY. GUARDRAILS HAVE NOT BEEN DESIGNED TO CONTAIN ERRANT VEHICLES.

- MAXIMUM POST SPACING = 3048 C/C.

- FOR GUARDRAIL ANCHOR DETAILS, SEE MINISTRY STANDARD DRAWINGS:
  STD-EC-010-04 - CL3 INSERT DETAILS

MATERIALS

- STEEL:
  RAILS
  - TO CSA G40.21M
    - GRADE 350W (COATED)
    - GRADE 350A (UNCOATED)
  - OR TO ASTM
    - A500 GRADE C (COATED)
    - A847 (UNCOATED)

  POSTS TO CSA G40.21M
  - GRADE 350W (COATED)

  PLATE TO CSA G40.21M
  - GRADE 350W (COATED)
  - GRADE 350A (UNCOATED)

- STEEL FABRICATION:
  WELDING:
  - SHOP WELDING IN ACCORDANCE WITH CSA W59 FABRICATOR TO BE CERTIFIED FOR DIVISION 1, 2 OR 3 IN ACCORDANCE WITH CSA W47.1.
  - FIELD WELDING BY COMPANY CERTIFIED TO CSA W47.1, DIVISIONS 1, 2 OR 3.
  - MIN. 6mm FILLET WELD UNLESS OTHERWISE NOTED.

  GUARDRAIL BRACKETS AND POST COATING TO BE EITHER:
  - GALVANIZED TO CSA G164 AS NOTED ON DRAWINGS. MINIMUM 610 g/m²; OR
  - PAINTED IN ACCORDANCE WITH MINISTRY STEEL GUARDRAIL COMPONENT PAINT STANDARD:
  - HSS RAIL TO BE PAINTED SAFETY YELLOW IN ACCORDANCE WITH MINISTRY STEEL GUARDRAIL COMPONENT PAINT STANDARD:

ASSUME NOT TO SCALE

SCALE AS SHOWN

Designed J.D. Date 2013/08/09
Checked J.H. Date 2013/08/09
Drawn W.R. Date 2013/08/09

Rev	Date	DESCRIPTION	Init
1	2013/10/21	ISSUED TO CLIENT	
2	2016/01/06	REDUCED GAP DISTANCE & PLATE SIZE	

REVISIONS

BRITISH COLUMBIA
The Best Place on Earth

MINISTRY OF FORESTS, LANDS & NATURAL RESOURCE OPERATIONS

STANDARD BRIDGE DRAWING

STANDARD BRIDGE GUARDRAIL - HSS RAIL
CL - 3

ORIGINAL SIGNED and SEALED BY: JULIEN HENLEY
APPROVED BY:
DESIGN ENGINEER
DATE JULIEN HENLEY
MOF ENGINEER
DATE
FILE No.
DRAWING No. STD-EC-010-03 | 2

CANCEL PRINTS BEARING PREVIOUS LETTER