Timber Grading 8

8.1 Timber Grading

Scaling under the *Forest Act* means to determine the volume and to classify the quality of timber. Classifying the quality of timber is known as grading. Timber is graded in accordance with the schedules of timber grades, set out in the *Scaling Regulation*.

Grading is used to make volume information from the scale more meaningful and useful to traders in timber and managers of forest resources. The quality and potential end use of logs has significant influence on their value. In addition to monetary values, log grade can also determine whether logs are accounted for cut control purposes. Grading is a key component in marketing finished products such as lumber, plywood and shingles . The scalers' challenge is to assess the visible characteristics of each log, and, with strict reference to schedules of log grades, determine what can be recovered from it. This chapter describes the principles of grading and details how timber is graded for purposes of the Forest Act.

As grading is in place to make scale data more meaningful it must serve many users including buyers, sellers and forest administrators. Grading must also be responsive to changes in utilization, forest practices and administration. While log grades have evolved and expanded in response to changing needs, the basic principles of grading have changed very little.

8.2 Timber Grading Requirements

In British Columbia, all timber harvested from private or Crown lands or salvaged must be scaled. Grading is an integral component and a legal requirement of the scale.

The legal authority for grading falls under the *Scaling Regulation*. This regulation prescribes two grading schedules; coast and interior. The method of stumpage used in the area where the timber is cut determines which schedule must be used.

- timber cut in areas where a log based appraisal system is used (predominantly coast) must be graded with the *Schedule of Coast Timber Grades*, and
- timber cut in areas where a lumber based appraisal system is used (predominantly interior) must be graded using the *Schedule of Interior Timber Grades*.

This chapter explains how timber is graded in accordance with the schedules of timber grades. The chapter - *Special Forest Products* - describes the scaling and classification of these products and is not contained in the grading chapter.

8.3 Principles of Timber Grading

On the Coast, grades represent the size, quality, and quantity available for potential manufacture of specific end products (lumber, veneer, shingles and chips). In the interior, grades represent the size, quantity and quality available to manufacture lumber and chips only. The proportions of a log's gross scale that are suitable for the manufacture of products are important factors in determining its commercial value.

Grade rules typically include three components:

- minimum and/or maximum gross log dimensions,
- a requirement that a percentage of the log's gross volume must be available to manufacture a given product, and
- a requirement that a percentage of the product manufactured from the log must meet or exceed a given quality.

Application of the grade rules requires the scaler to:

- determine the log's gross dimensions,
- estimate what portion of the log is available to produce a given product, and
- consider the quality of the product that could be produced from the log.

To ensure grading is fair, consistent and reliable, it is premised on some basic principles:

- it is done in strict compliance with the grading rules contained in the schedule of grades,
- it assumes only common end products,
- it assumes only conventional manufacturing processes, and
- it is entirely independent of the marketing and/or processing practices of the purchaser.

It is the job of the scaler to assess the visible characteristics of each log and, with strict reference to the schedule of grades, determine what can be recovered from the log given its size and other characteristics. It is up to the manufacturer to get the best and most product out of the available volume.

The process of visualizing and quantifying the portions of the log not suitable for the production of lumber (or other product), is known as grade reduction. Unlike firmwood deductions that reduce the firmwood volume of the log, grade reductions are made solely for the purpose of determining the grade.

In addition to grade reduction, application of the grading rules requires the scaler to assess the quality of the products that could be produced from the log. This requires an assessment of the size, frequency and distribution of knots, and an assessment of any visible spiral grain or twist of the log.

The following sections describe log characteristics which:

- impact potential product recovery (quantity), and
- impact product quality.

Another principle of timber scaling and grading is timeliness. Here is the link to sections Time of Scaling and Late Scale Requirement of the *Scaling Regulation* (BC Reg. 446/94) which addresses this topic.

http://www.bclaws.ca/EPLibraries/bclaws_new/document/ID/freeside/446_94

8.3.1 Characteristics Which Reduce Product Recovery (Quantity)

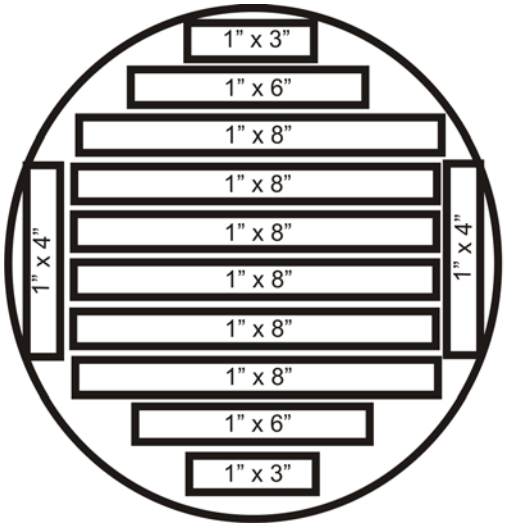

Lumber is a manufactured product derived from a log in a sawmill, or in a sawmill and planing mill, which when rough, shall have been sawed, edged and trimmed at least to the extent of showing saw marks or other marks made in the conversion of logs to lumber on the four longitudinal surfaces of each piece for it's overall length, and which has not been further manufactured other than by cross-cutting, ripping, resawing, joining crosswise and/or endwise in a flat plane surfacing with or without end matching and working. (Source - the National Lumber Grades Authority)

Figure 8.1 Minimum Dimensions for Recovery.

> A board foot is the unit of measurement of lumber 1 inch (2.54 cm) thick, 1 foot (30.5 cm) wide, and 1 foot (30.5 cm) long, or its equivalent in thicker, narrower, or longer lumber.

The log characteristics discussed in this section reduce the proportion of the gross log suitable for the production of lumber, veneer, or shingles. Rot, hole, and char will also reduce the quantity of chips that are recoverable. The scaler must determine what portion of the log is not suitable for manufacture because of these defects. This is known as grade reduction or consideration. Although the defects affecting timber quality are described separately, the scaler must evaluate the whole log in terms of the cumulative effect of the separate quality defects observed.

8.3.1.1 Fractures and Fibre Separation

Wood fibres may separate or split across the annual rings (for example - surface checks, frost check) or between the annual rings (ring shake, water shake). Once this separation has occurred, any lumber manufactured across the separation will likely fall apart. Grading must account for the volumes of firmwood that cannot be cut into lumber, veneer, or shingles because of these fractures.

For the purpose of this manual, fibre separation perpendicular to the growth rings is referred to as *check*, and fibre separation between the growth rings is referred to as *shake*. Shakes are classified into two types according to the direction of the plane of fracture; the

heart shakes (often termed heart check) and the ring shakes. Surface checking occurs on the outer surface (sapwood) and often penetrates to the inner part (heartwood) of logs.

Types of Checks:

- End
- Surface (Straight)
- Spiral
- Weather

End checks are checks that show only on the ends of the log and extend from the outside surface towards the heart. These may or may not run up the bole of the log. Scalers must use good judgement in deciding how far a check runs along the bole of the tree. End checks are counted to assess the grade according to the Grade Code 2 *Log Requirements for Interior Grading*.

Surface (straight) checks are on the bole of the tree with no degree of spirality. Surface checks are assessed in conjunction with end checks to determine grade and in some instances may assist with determining the depth of checks on the bole of the log. Surface checks have a proportionately greater lumber recovery loss on small logs then larger logs.

Spiral checks may follow the deflection of the grain and can cause a much greater grade reduction than a straight check because of the loss due to the inclusion of the fibre as it spirals. Some situations where spiral checks may occur are in logs with frost checks and in snags.

Weather checks differ from end or straight checks in that they appear to be wider in the centre of the log end than at the edges. Often weather checks will radiate towards, but not as far as, the surface of the log. Weather checking occurs on the ends of logs and usually does not penetrate very far. Delays in presenting logs for scaling, such as leaving logs in the woods or in cold decks, often result in a type of surface check known as weather checks or sun checks, which are caused by rapid seasoning. These checks are usually about twice in depth at the ends of the log than elsewhere on the log because the end is where the fastest drying occurs, and observation of the log ends will tend to overestimate the overall penetration of this type of check.

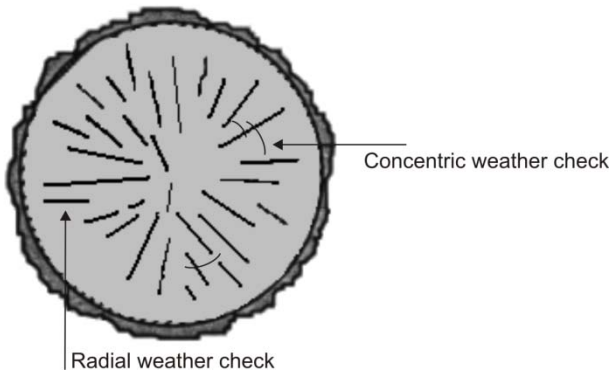

Figure 8.2 Weather Checking.

Surface and end checks due to delays in scaling are disregarded for the purposes of grading. The Ministry may order that such checks be ignored.

Breakage (splits and shatter), as a consequence of normal harvesting and log handling operations are accounted for in the process of grading. The Ministry may order that such checks be ignored. Damage done to timber after delivery is not accounted for as a grade reduction.

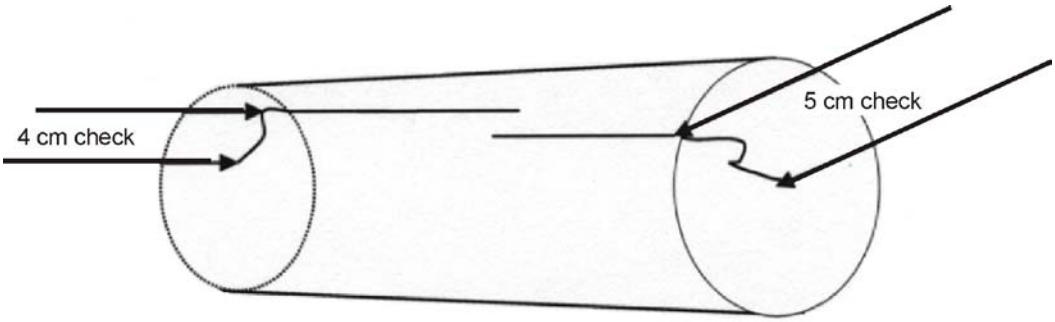

Figure 8.3 An Example of a Irregular Surface Checks.

A check is a fibre separation across the growth rings. It can be straight or irregular and sometimes shows as broken or crooked on the ends of a log. Single checks will sometimes 'skip' along the length of a log. The scaler must first evaluate the check according to what can actually be seen on the log. Then they must follow the requirements for each grade as described in the Timber Grading chapters.

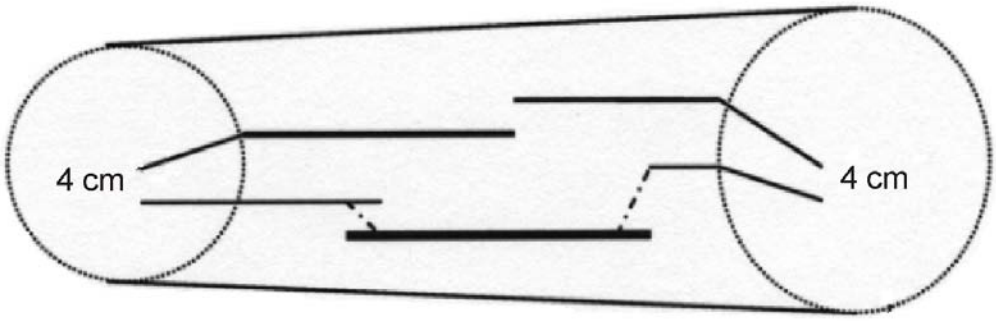

Figure 8.4 An Example of a 'Skipping' Irregular Surface Checks.

8.3.1.2 Bark Seams

Bark seams are formed as a result of bark enclosing a point on the outside of a tree which has no wood growth, so that over time, a seam of bark is left extending inward from the edge of the tree. Lumber and veneer cannot be recovered from the area of the seam. The volume of firmwood that cannot be manufactured because of bark seams must be determined by blocking out the end area of the wood lost for product recovery and multiplying the cross sectional area by the length of the seam. If there is at least 10 cm between bark seams, it is considered available to manufacture a product

8.3.1.3 Sweep, Crook and Pistol Grip

Sweep is a bow like bend in the trunk of a tree, whereas crook is a definite kink at one point in the stem most often as a result of the tree losing its leader. Pistol grip is a pronounced bend at the butt end of a log resembling the handle of a pistol and is often seen on trees growing on steep side hills. All three reduce the amount of product that can be recovered. The volume of wood that cannot be manufactured because of sweep, crook, or pistol grip must be estimated. Crook also frequently accompanies a firmwood loss since decay fungi may have entered the stem through the broken leader.

8.3.1.4 Rot, Hole, Char, and Missing Wood

Rot is caused by a variety of fungi which break down and feed off the lignin and/or cellulose in the wood. Hole is rot in its final stages. Char is wood that has been reduced or severely weakened by combustion or extreme heat exposure (fire). Rot is the most common firmwood defect for which a grade reduction must be made.

The rot fungus typically enters the tree through a root, broken branch, damaged leader or scar on the stem. The remains of an old scar, a damaged leader, a crook or fork in a log often mean rot is present. Scalers must carefully inspect all visible log surfaces for indicators of firmwood defects. Logs cut from older trees are more likely to contain rot, especially logs cut from species such as cedar, hemlock and balsam which are more susceptible to attack by fungi.

No firmwood deductions are made for stain (incipient decay), as long as the wood is still firm, but it may be a consideration in assessing some coastal grades. If fragments of wood, taken from the suspect area don't hold their integrity when pulled apart, then the wood is rotten, not firm, and both a firmwood deduction and a grade reduction must be made.

In grading, the scaler must estimate how much the rot will reduce the percentage of the log that can be manufactured. Some of the sound wood adjacent to the rot is also lost to lumber production since the sawyer must square out around the defect. To account for this additional loss a trim allowance around the defect is usually made.

The scaler must also consider collars and shells of firmwood that surround defects as well as logs and log segments, which are too short to manufacture the products as stated in the grade rules.

8.3.2 Characteristics Which Reduce Product Recovery (Quality)

The previous section looked at the grade reductions that reduce the quantity of product that a given log is likely to yield. In log grading, we are also concerned with the quality of the products that can be produced from the log.

There are two parts to the grading question that must be answered:

- how much product will a particular log cut, and
- of that product cut, how much of it will be merchantable and/or clear.

In addition to the percentage of a log that can be manufactured into a given product, the grade rules also specify that a minimum percentage of the product manufactured from the log must be merchantable and/or clear. This section deals with the second part of the grading questions.

Merchantability is determined by assessing the size and placement of knots, and the degree of any spiral or twist observed on the log. Merchantable lumber is considered to be lumber which grades better than utility. There is no direct relationship between log grading and lumber grading, as lumber graders assess the finished product, whereas scalers must assess the round log from which the product is cut. For instance, the grain slope permitted by the National Lumber Grades Authority* differ from the twist allowance in the log grading schedules; a scaler cannot presuppose the affect of grain slope on lumber, because sawing methods have a major impact on grain slope. The log grading rules therefore only gauge the recovery potential of a log under average sawing conditions.

Where the grade rules require that a percentage of the out turn be clear, it means that the stated proportion of the product must be free of knots and stain.

In addition to the defects that reduce the potential product recovery volume, some log characteristics reduce the quality of the products that may be recovered. These characteristics include twist (or spiral grain) and knots.

* *NLGA is the organization responsible for writing, interpreting and maintaining Canadian lumber grading rules and standards.*

8.3.2.1 Twist (Spiral Grain)

As trees grow they often spiral about their central axis. When these twisted trees are manufactured into lumber, slope of grain may affect strength, and therefore the quality of the lumber. When twist is excessive, the lumber milled from such a log will not be merchantable. Where other quantity reducing defects that follow the grain such as spiral surface checks occur in conjunction with twist, the loss in terms of product recovery caused by those defects is greatly increased.

Twist must be measured where it represents the degree of deflection. Areas around large knots, knot clusters, crooks, forks, burls, goitre, catface and other irregularities are not representative and must be avoided. Twist may also show a general change over the length of a log. On some logs, only a lineal segment rather than the entire log may twist. In this instance where twist is not uniform, only lumber sawn from the excessively twisted segment will have its merchantability affected and the scaler will have to determine what percentage of the lumber will be non-merchantable. In the Interior sections of the log displaying excessive grain deflection are deemed to be unsuitable for the manufacture of merchantable lumber and that section will constitute a grade consideration.

Grain deflection is expressed as a percentage of log diameters using the measurement perpendicular to the longitudinal axis of a log. In coast grading it is the top diameter for logs up to 12.8 m in length and for logs over 12.8 m in length, the diameter inside bark at a point 12.8 m above the butt of the log. In Interior grading the top diameter is used for logs up to and including 8 m and the measured mid-point diameter is used for logs over 8 m.

Twist is measured over a representative 30 cm section of log length according to the principles outlined below. These are:

- twist is measured where it can be seen,
- assumptions are not made about portions of a log not visible, and
- areas around irregularities are avoided.

The amount of twist permitted for a particular grade is expressed as a percentage of log's diameter according to the grade rules. Specific twist requirements are described by grade in the *Coastal and Interior Schedule of Timber Grades*. Grain deflection is measured as described in Figure 8.5.

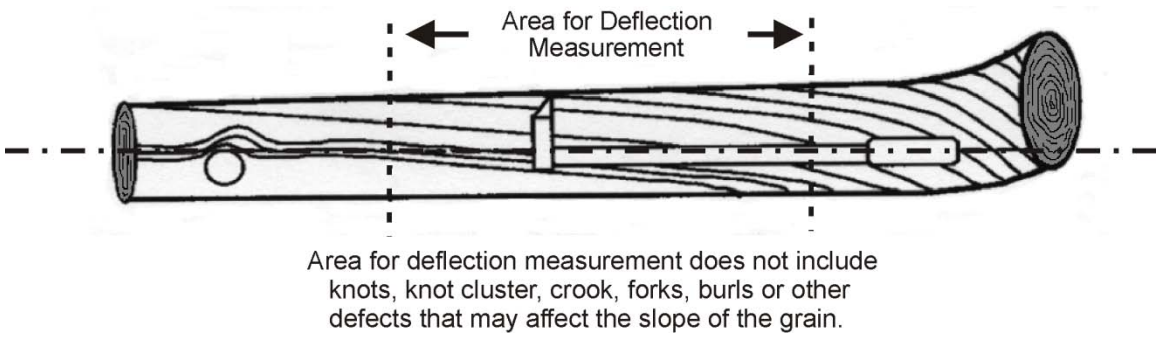

Figure 8.5 Measuring Twist – Placing the Stick.

As shown, orient the scale stick parallel with log's longitudinal axis.

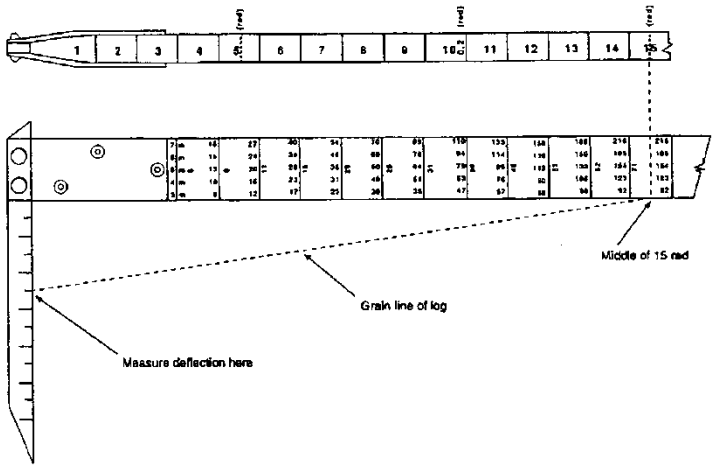

Figure 8.6 Measuring Twist – Reading the Deflection.

With its shaft parallel to the log's central axis, the stick is positioned such that one of the log's grain lines passes right through the middle of the 15 rad class (30 cm). The point where this grain line intersects the tine is the deflection. The deflection is then read where the grain line intersects the tine. Here, it reads as 5 cm.

> The tine of this stick is graduated in centimetres. Although not a requirement, scalers often mark them out to improve accuracy.

In Figure 8.6 this defection measurement is 5 cm or 2.5 rads. If this deflection was measured from a log with a 33 rad top, it would constitute a deflection of 7.6 percent.

$$\frac{5\,cm}{66\,cm} x\,100 = 7.57575\,or\,7.6\%$$

8.3.2.2 Knots

The size, type, and distribution of knots have a significant impact on lumber quality and are a key consideration in applying the grade rules.

8.3.2.2.1 Size of Knots

The presence of knots or knot indications on a log may preclude the production of clear lumber from the affected portion. Knots larger than 2 cm will reduce lumber quality because the grain deflection around the knots weaken the recovered lumber, even though the actual knot fibres may be denser and stronger than its supporting tissue. The larger the knot size, the greater the grain deflection, causing cross grain in the region of the knot. Extremely large knots will make the cutting of merchantable lumber difficult. Knot size is measured in centimetres or rads of diameter.

Where the Grade Rule requirements stating maximum knot sizes and/or location are met, the merchantable and/or clear lumber percentage requirement for the grade will be satisfied.

Individual grade requirements specify the maximum knot sizes by top diameter class with the exceptions of, for on the Coast logs 12.8 m in length and over, the diameter at 12.8 m measured from the butt end of the log is used for knot assessment.

In the interior, logs over 8 m in length, the top half of the log is assessed using the top diameter and the bottom half is assessed using the midpoint diameter.

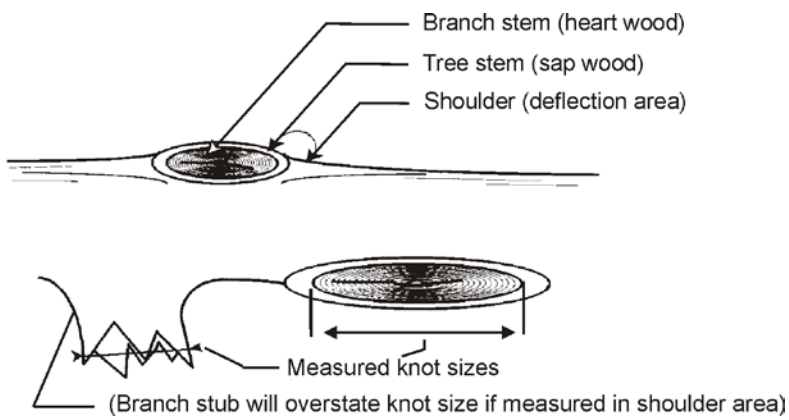

Figure 8.7 Measuring Knot Diameters.

Critical to the assessment of knot diameter is to exclude grain deflection around the knot in the measurement. Under close examination, the knot will have a circular grain pattern, like a log end, and this is the area measured. The tree stem wood grows around the knot (deflection), and forms the shoulder wood. It is easy to measure loose or encased knots, because there is a clear distinction between the knot wood and the tree wood; tight or inter grown knots are harder to learn to assess, because the two are interconnected.

Maximum allowable knot size increases with the diameter of the log and are expressed in centimetres of diameter. When taking this measurement, only the actual knot should be measured and not the shoulder surrounding it.

In addition to their size and characteristics, the location and distribution of knots must be carefully considered. For example, if log segments must be 2.5 m long to produce merchantable lumber, occasional oversized knots are permitted if it is possible to cut merchantable lumber from between them. In general, one oversized knot is permitted every 3 m for the coast and every 2.5 m for the interior, allowing ample room for recovery of merchantable lumber between the knots. Similarly, where the oversized knots are concentrated in one quadrant, along one side, or near one end of the log, the remaining portions will yield merchantable lumber.

> As knots are a key determinant in log grading, it is important that scalers become very familiar with their impact. This knowledge is best achieved through on-site training, observation of log breakdown, and practice.

Knot spacing specifications for coast and interior grades are found in the Requirements for the Grade.

8.3.2.2.2 Types of Knots

Knots in timber are sound or rotten; and tight or loose. Lumber sawn from logs with sound, tight knots is generally of a higher quality than lumber with loose or rotten knots.

Rotten knots in timber occur when there are broken and dead branches in trees as these represent an entry point for fungus spores, which lead to decay. Rotten knots can also be indicators of internal decay. The appearance of knots that have been bucked through or bucking adjacent to such knots serves as good evidence of the pattern of decay characteristics for a particular timber stand and species.

Tight knots are found where the branches on the tree were still living or green when the tree was harvested. The tissue system of the branch is interconnected or intergrown with the tissue of the log, and the grain orientation in the trunk wood is laterally distorted around the knot and passes in a wide sweep on either side.

When a branch dies, the cambium in the branch ceases to function, and there is a break in the continuity of the woody tissue between the branch and the stem. The portion of the branch base that is embedded in the tree trunk after the branch dies causes a loose, encased, or black knot in lumber. Since the wood of the tree trunk is not continuous with that of the encased knot, there is less distortion of the grain around it than with tight knots.

Consideration for knots is part of the application of the Grading Rules for both the Coast and the Interior

8.3.2.2.3 Distribution of Knots

The distribution of knots in logs is determined by the growth characteristics of the tree.

After becoming established, coniferous trees typically grow 0.2 to 1 m per year depending on the species and suitability of the growing site. When the tree matures upward growth decreases significantly. As Balsam, Fir, Pine, Spruce and Larch grow; they add a whorl of branches at the start of each year. Normal branch distribution in small diameter stems sees whorls spaced between 0.3 and 0.5 m apart. Red Cedar, Yellow Cedar, and Hemlock branches are not produced in regular whorls. Instead, their branches are spaced on the stems of young trees 0.3 to 0.5 m apart.

After a tree reaches mature height, additional branch whorls are still added each year but the branches are much closer together. Sometimes trees produce a number of branches in a bunch, resulting in a cluster of knots in the wood. A close grouping of knots (cluster knots or bunch knots) reduces the strength of the lumber cut from that portion of the log containing the cluster or bunch of knots.

In general, a cluster or bunch knot occurs where the knots are so close together that the grain of the wood is deflected around the knots rather than between them.

Bunches or clusters of knots are to be encircled with the smallest diameter circle or oval that will encompass the grouping. The average diameter of this circle or oval is then taken as the effective bunch knot diameter.

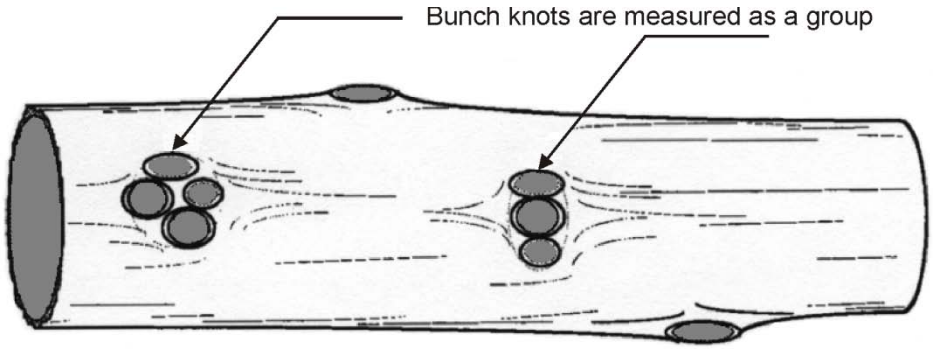

Figure 8.8 Measuring Bunch (cluster) Knots.

The figure above shows the measurement of bunch knots. Bunch knots or cluster knots are defined as those circumstances where the majority of the log's grain deflects around, rather than through or between a close grouping of knots, which will reduce the strength of the lumber produced. Where this occurs, the group of knots is assessed the same as an oversized knot; the smallest circle or ellipse that will surround the cluster is taken as the knot diameter.

Certain species such as Douglas Fir, Larch, Cedar, Cypress and Alder, when stressed, produce adventitious branches (sucker limbs) which, after a period of time, may come to

take the appearance of knots or knot clusters. These sucker limbs do not; however penetrate very far into the log since they form much later in the tree's life cycle than regular branches. Therefore, they do not have nearly as much impact on the manufacturing potential of the log as their size might suggest. Scalers working with such logs should come to recognise this characteristic and observe some of these logs in the breakdown process.

Knots that indicate the presence of conk or other stem rots should also be assessed in terms of their potential to indicate the extent of heart rot, rather than simply in terms of lowering lumber quality. For example, even though a knot may be under the maximum allowable size but is rotten, there is a good chance of a grade reduction for heart rot. However, the firmwood loss from rot confined to the knot is not significant enough to warrant a volume deduction or grade reduction in the large majority of cases.

8.3.2.2.4 Assessing Knots

The conventions used to assess knots are:

- the specified knot size and distribution in the grade schedules for any log grade is always based on the gross log diameter inside bark before any deduction is made for sap rot or other defects,
- knots are measured at right angles to the log length except in peeler grades where the maximum diameter is used,

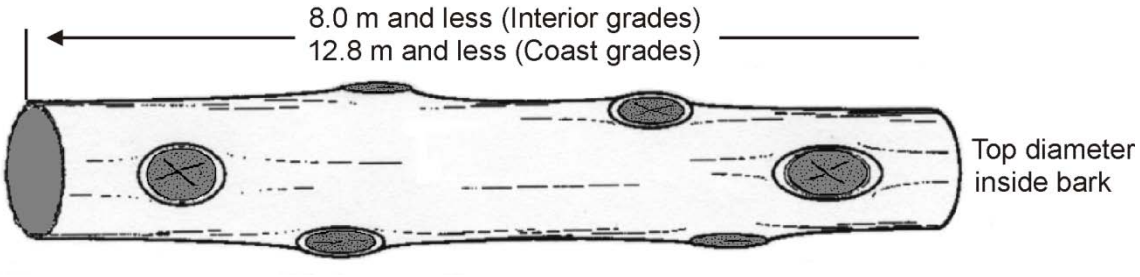

Figure 8.9 Assessing Knots - Coast and Interior.

- for interior logs up to and including 8 m in length, and for coastal logs up to and including 12.8 m, knots are assessed against the top diameter of the log
- for coastal logs greater than 12.8 m in length, knots are assessed against the diameter measured at 12.8 m from the butt end of the log,

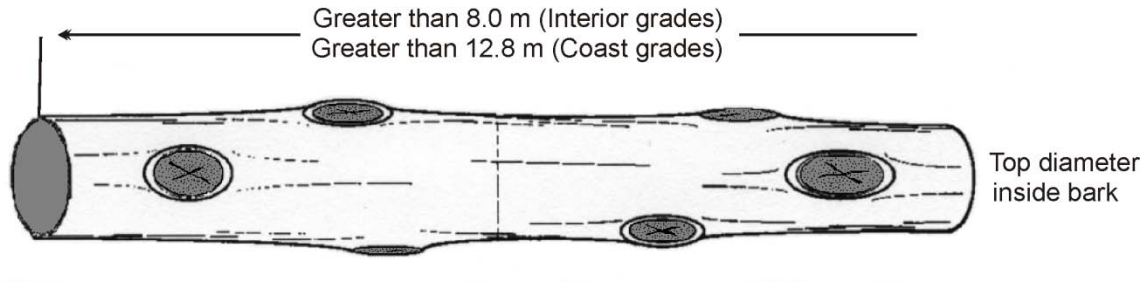

Figure 8.10 Knots and Midpoint.

- for interior logs greater than 8 m in length, a midpoint diameter must be taken. Knots on the butt half are assessed against the maximums specified for the midpoint diameter, and knots on the top half of the log are assessed against the maximums specified for the top diameter, and

- slabs are measured across their width for determining knot allowances. Widths for slabs of all shapes are illustrated in the Firmwood Measurement Procedures chapter. For purposes of knot assessment, if the thickness exceeds the width, the wider measurement is used.

Once the scaler has:

- identified the oversized knots from the top or top and mid-point diameters,

- determined that their spacing is less than 3 m for the coast and 2.5 m for the interior along the length,

- decided that a grade reduction is warranted, then

- it becomes necessary to observe the orientation and distribution of the knots in order to evaluate the affect on grade.

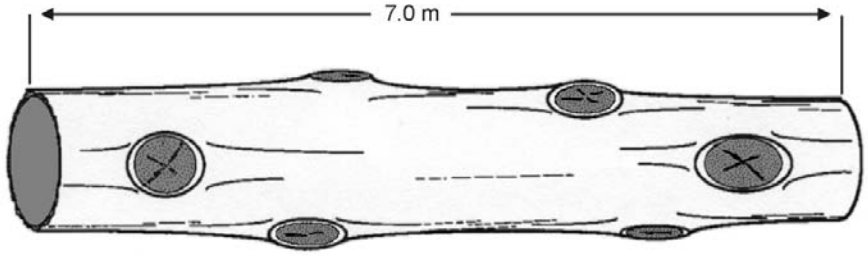

Figure 8.11 Oversized Knots Distributed Over Entire Surface.

The first log shown here has its oversized knots distributed over the entire length of the log. Because there is no portion of the log that will allow 2.5 m lumber, the log will not produce merchantable lumber and is one hundred percent grade reduction.

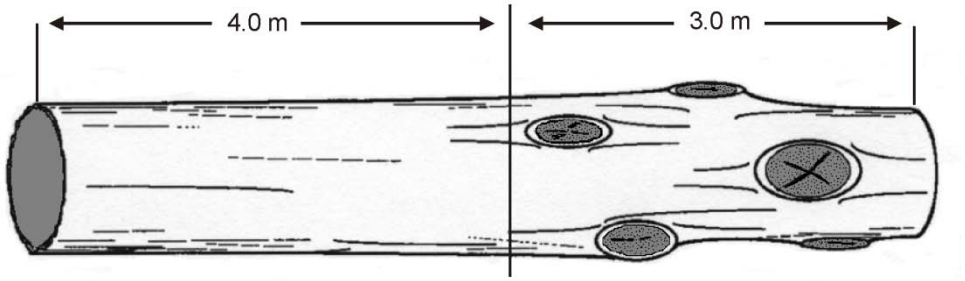

Figure 8.12 Oversized Knots Near the Top of the Log.

This example has oversized knots concentrated near the top of the log. After the scaler notes that 3 m of the log will not produce merchantable lumber, the impact on the quality of the whole log is calculated to be about 43 percent of its total length, but somewhat less than 43 percent of its volume.

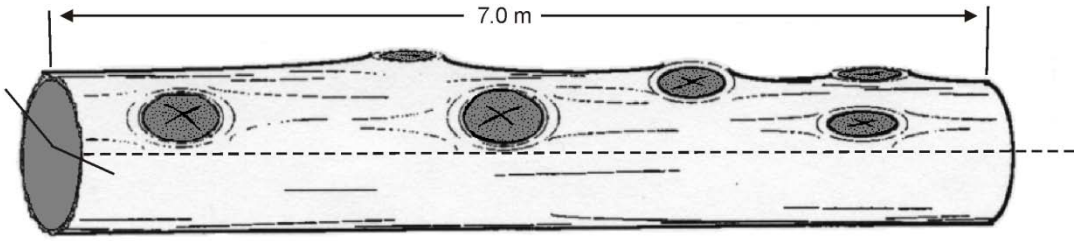

Figure 8.13 Oversized Knots on One Side.

The third log has its oversized knots concentrated along one side. Almost half of the log will not produce merchantable lumber because of this, but more than half is not affected at all by knots. Therefore, the impact on the quality of the whole log is estimated to be about 45 percent of its volume. However, size is also a factor in the assessment; a 30 rad log may be broken down into quarters to maximize merchantability, where a 5 rad log cannot even be halved.

Of course, these examples are conceptual in that knots do not usually present themselves so obligingly. With experience, scalers will learn to quickly understand the impact of knot location and distribution. However, it is best for the beginner to pick out each of the elements in turn. For example, if the knots are distributed along one quadrant and around the top end, do one assessment, then the other. The total assessment is the cumulative effect on the log.

8.3.2.3 Insect or Worm Holes

A number of insects lay eggs under the bark of trees and the larvae will bore through the wood as they develop. When the presence of borings is observed, the quality of potential products may be reduced and the log grade affected. In the Interior, Grade code 1 does not

permit 5 or more insect holes to penetrate beyond the sapwood of the tree per running metre, except for those of the ambrosia beetle which are disregarded altogether.

On the Coast, most premium grades do not allow insect or worm holes to penetrate past the sap wood. Cedar is affected by the borings of larvae of the western cedar borer. It is known as powder worm and it is a serious defect, not allowed in six of the cedar coastal grades.

The ambrosia beetle attacks felled timber, and the small holes made by this insect are common. This is not a serious defect for sawlog and utility grades that require merchantable quality lumber. Where the borings penetrate beyond the sap wood, the affected portion of the heart wood may not produce any clear lumber.

Damage caused by marine creatures, including teredos, is not considered in the official scale for volume or grading purposes, but should be noted as a remark on the scale return.

8.3.2.4 Non-Permissible Defects

There are a number of defects that are not permitted to be present in certain grades of logs. Where such a defect is present, the log will be disqualified from the grade in Coastal grading, and from lower grades where the log is required to have been "otherwise" the higher grade for which it has a prohibited defect. For Interior grading non-permissible defects may disqualify a log from the premium grade based on a number of factors.

Examples of defects which are not permitted in certain grades on the coast are conk stain, powder worm and in the interior, checks over 4 cm deep.

Some grades permit certain defects only to a clearly defined limited extent. Examples of this are ring shake, pocket rot, pitch pockets and the number of insect holes. When the defect is not confined to the stated limit, it is treated as a non-permissible defect for that grade. All of the above defects are defined by log grade under the Log Requirements to Make the Grade.

8.3.2.5 Grain Density (Ring Count) - Coastal Grading Only

The diameter growth rate of a tree is dependent upon the species, its genetic makeup, climate and other site specific conditions. Growth is more rapid early in the growing season, and the 'early wood' produced at this time consists of large, light coloured cells. The 'latewood' cells produced later in the season are smaller with thicker walls, and so appear to be darker. Each pairing of light and dark bands comprises one 'annual ring', which marks one year’s growth.

Grain density or the closeness of the annual rings is a consideration in coastal grading. Finer grained logs (more closely spaced annual rings) yield higher quality lumber and veneer, and as such, usually command higher values than logs with more widely spaced annual rings.

8.3.2.6 Compression Wood (Interior only)

The general effects of compression wood on the performance of sawn timber are reduction in the strength, stiffness and dimensional stability, resulting in a decrease in yield of high quality end products.

Compression wood is a type of defect that tends to form in conifers on the underside of leaning stems, on the leeward side of trees exposed to strong winds, in crooked stems and in the lower part of trees growing on a slope. Compression wood may cause problems in processing the log by exhibiting bow and spring in the manufactured product.

Compression wood is formed in a leaning tree and it is often characterized by a dense hard brittle grain and reacts to seasonal moisture changes. In hardwood trees, it forms on the upper side of the lean and is called tension wood. In softwood trees it forms on the lower side of the lean and is called compression wood.

Where the heart (pith) is displaced by more that 20%, from the centre of the log it affects the quality of the lumber that is cut from the "compressed" side, or portion of the log. Compression wood is identified in off centre hearts by the "compressed" or tight grain that appears on the smaller log side (shaded area), while the other (larger segment) of the log has normal ring separation and is free of "compression" effects.

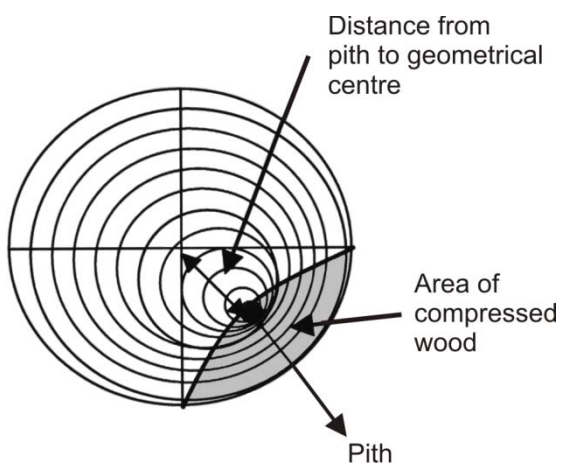

Figure 8.14 Measuring Compression Wood (the shaded area is the area of grade consideration).

A grade reduction can be made in the assessment of Interior Grade code 1 only. Normally off centre heart affects less than 2.0 metres of the log length, however, other external indicators may be present which indicate the displacement of the heart extends further in the log.

To calculate the determination of the 20% offset measure the gross diameter of the log where the defect is seen, determine the geometrical centre of that end, and measure in centimetre from the pith to that centre. That measurement divided by the gross diameter

multiplied by 100 will be the percentage of the offset. Example: gross diameter is 20 rads; the measurement if 4 rads, 4 rads/20 rads x 100 = 20%.

The measurements must be taken from the section of the log that is affected or compressed. If the percentage is greater than 20% a grade consideration must be calculated.

1. Measure the area affected by the compressed area from the pith to the outside edge.

2. Decide on the length of the defect to a maximum of 2.0 metres, unless there is an indication that another length would be more suitable.

3. Calculate the volume of grade reduction for Grade 1 candidate logs only.

8.4 Applying the Principles of Grading

Grade Reduction is the process of determining what portion of a log is not suitable for the manufacture of various products. The previous section outlined the defects found in logs which reduce the amount of finished product which can be recovered from logs. These defects include:

- firmwood defects (including rot, hole, char, and missing wood), and
- non-firmwood defects (including shake, checks, frost cracks, shatter, splits, forks, catface, deadside, lightning scar, bark seams, goitre, pistol grip, sweep, and crook).

As explained in later sections, grade reduction requires that a trim allowance be applied around most defects. In addition, grade reduction must account for other volumes that are not available for manufacture. These include:

- collars of firmwood too thin to cut lumber,
- segments of slabs too thin to cut lumber,
- sound hearts that are too small in diameter, and
- the defect free portion of logs and slabs too short to cut lumber.

> Grade reduction is only used in the assessment of log grade. The firmwood contents or the net dimensions that yield the firmwood contents must always be recorded as the official British Columbia Metric Scale volume.

The volume of the log not available for the manufacture of lumber or the other products is the grade reduction volume. In applying the grading rules, the scaler must deduct this volume from the gross log volume and express the remaining volume as a percentage of the gross volume. This percentage represents the percentage of the log that can be manufactured.

$$\frac{\text{Gross Volume} - \text{Defect Volume}}{\text{Gross Volume}} \text{ x } 100 = \%\,\text{Suitable for Manufacture}$$

Determining the grade reduction volume and calculating the percentage suitable for product recovery while not difficult, can be time consuming. As scalers gain experience and complete numerous grade reduction calculations, they become proficient at estimating grade reductions.

Experienced scalers may find it necessary to perform only periodic full calculations for confirming their estimates and determining grades on borderline logs.

An experienced scaler will also follow a number of approaches to avoid needless calculations:

- they look for obvious tree characteristics which may impact the grade (e.g., excessive knots or twist will considerably narrow a logs grade potential), and
- they understand the relationship between certain defects and log size (e.g., a 2 rad surface check on a small log may have a very significant impact compared to the same check on a large log.

Initially, scalers are strongly advised to calculate all grade reductions. It is only through such a background of disciplined practice that good judgement and "log sense" will develop. While this log sense is never really lost, it can be weakened by periods of inactivity and even highly experienced scalers should periodically reconfirm their skills, especially after periods of layoff.

8.4.1 Determining Grade Reduction

Using field methods which do not account for taper (known as linear methods) will not yield the same results as methods which employ a full metric volume approach using Smalian's formula (known as volumetric method). The volumetric method is deemed to be correct and accurate.

Although characteristics are described individually, scalers must consider the whole log in determining its grade. The scaler must determine and consider the following factors:

- log size,
- whether it is a round log or a slab,
- what proportion of the log will produce lumber and chips,
- the quality of end products, and
- the presence of non-permissible defects.

8.4.2 Log Size

Potential end use and product recovery is in large part determined by each log's end diameter. Other factors being equal, larger logs will produce more and better quality lumber than smaller diameter logs. As such, grade rules specify minimum log diameter criteria.

While the official coastal grade rules are expressed as centimetres of radius, this unit is the equivalent to "radius class units" (RADS) which are expressed as "RADS of diameter". The scaling convention is that diameters are measured and recorded in RADS. For example, a recorded measurement of 5 rads is equal to 5 cm of radius for the purpose of grading.

In applying the diameter criteria, note the following:

- Unless otherwise specified, diameters are the gross diameter inside bark at the small end of the log. The gross diameter is the actual measured diameter before making any deduction for any defect and including sap rot.
- For logs which require more than one diameter measurement, the diameter for the purpose of grading is the rounded gross diameter for the small end, or top of the log. A log that rounds up to the minimum diameter for a grade qualifies for that grade.

8.4.2.1 Length

Length measurements specified in the grade rules are the actual unrounded gross measurements. Where a log meets the minimum gross length for a grade but requires a deduction, which reduces the net recorded length below the minimum, it is graded based on its gross length.

Length is a factor in log value, both in terms of efficiency in handling and lumber value potential.

Scalers use various accepted indicators at the local Ministry level (local knowledge) to accurately estimate the length of defects. In cases where there are no accepted indicators by the local Ministry, the conventions for estimating rot in the *Firmwood Defect and Conventions* chapter may be employed after approval by the Regional Executive Director, District Manager or Forest Officer (scaling).

8.5 Assessing Product Recovery

Grade rules require that a certain specified percentage of the gross log volume must be available for manufacture of a given product based on the grade rule. This requires the grade reduction volume to be calculated. The net log volume, available for manufacture of a given product based on the grade rule, must then be calculated and expressed as a percentage of the logs gross volume.

The official methods for calculating grade reduction are similar to those used for determining firmwood deduction. Scalers should carefully study the *Firmwood Measurement Procedures* chapter and practice these procedures on logs until they are thoroughly understood.

Except for logs with sap rot or char, which are otherwise sound, the grade reduction volume is always larger than the firmwood deduction volume. There are three reasons for this:

- there are a number of defects such as fractures, bark seams, goitre, sweep, and crook that reduce product recovery but do not cause firmwood loss,
- additional defect free volume around the allowable defects (the trim) is lost in the manufacturing process, and
- while the firmwood loss is related only to the size of the defect, the grade reduction loss is also dependent upon the orientation of the defects in the log. That is, a defect may be so positioned as to render additional log segments too short or may cause the residual collar (log shell) to be too thin for manufacture.

Log radius in the grade rules is expressed as centimetres of radius, which is equal to and interchangeable with, rads of diameter.

An exception should be noted in the grade rule for firmwood reject where the measurement is expressed in centimetres of diameter.

Potential end use and product recovery are in large part determined by each log's end diameter. Other factors being equal, larger logs will produce more and better quality lumber than smaller diameter logs.

While the official grade rules are expressed as centimetres of radius, this unit is the equivalent to "radius class units" (RADS) that are expressed as "RADS of diameter". The scaling convention is that diameters are measured and recorded in RADS. For example, a recorded measurement of 5 rads is equal to 5 cm of radius for the purpose of grading.

8.5.1 Lengths of Defects

Scalers may use a variety of accepted indicators at the local level (local knowledge) to accurately determine the lengths of defects. Scalers must be cautioned however, that conventions are only 'rules-of-thumb'. When logs are bucked shorter than 4.9 metres scalers must not, and should not automatically downgrade based on "the heart rot in one end" convention. Bucking practises must be conducted for the purpose of ensuring an accurate scale. It is the responsibility of the scaler to demonstrate how the defect length determination was made.

Experience is gained through the observation of bucking and manufacturing process. Conventions should be tested regularly to ensure they are applicable. This is demonstrated through study, training, observation and support from the scaling community in both industry and government.

Although scalers should work together to ensure a complete and accurate scale, when the Regional Executive Director, District Manager or Forest Officer (scaling) determines that a convention does not apply, they may order that its use be stopped. This will ensure that the scale data provided is accurate and complete.

8.5.2 Determining Grade Reduction for Collars (Shells)

Where logs have heart defects, the collar or shell of sound wood surrounding the defect must meet a minimum thickness requirement in order for lumber to be cut from it, according to the following specifications:

1. The minimum collar thickness specified is the actual unrounded measurement of the collar taken before trim allowance has been added to the defect,

2. For all logs scaled and graded under the Schedule of Coast Timber Grades, the minimum collar or shell thickness needed in order to produce lumber is 5 rads (10 cm). This applies to all collars surrounding internal (heart) defects such as heart rot, pocket rot, holes, ring rot, ring shake, water shake, and star check,

3. For all logs scaled and graded under the Schedule of Interior Timber Grades, the minimum outer collar thickness is 7.5 rads (15 cm) for heart rot, holes, and star checks only. For pocket rot, ring rots, ring shake and water shake the minimum collar thickness is 5 rads (10 cm).

4. Where a collar or a portion of a collar does not meet the minimum thickness requirement, the volume of the collar or portion must be included in the grade reduction. An exception is where the diameter of the defect is 20 percent or less than the diameter of the log end in which it appears. In such cases, the collar is deemed to be thick enough to cut lumber, so trim allowance is added to the defect measurement and the grade reduction is then calculated. This rule is used to prevent unreasonable down grading of smaller diameter logs with a very small core of heart rot. Only logs up to 12 rads in diameter (with 5 rad collar requirement) or logs up to 18 rads in diameter (with 7.5 rad collar requirement) are affected.

Scalers must exercise care when measuring collar thickness. They must evaluate the actual, unrounded measurements of the collar. It is tempting to simply subtract the defect diameter from the recorded log diameter and divide the difference by two, but this method of averaging the collar thickness can lead to mistaken assumptions. For example:

- on logs with excessive butt flare, this method will often considerably under-estimate the true collar thickness since the butt diameter has been reduced by callipering to compensate for the flare, but the defect is not. Experience has shown that defects usually follow the growth rings, so it is more reasonable to presume that if there is collar at the end of a log, there will still be collar at the point where the log was callipered, and

- on logs which have an off-centre defect, this method will not reflect the possibility that a portion of the log will or will not meet the grade requirement. For example, in Figure 8.13 the off-centre star shake has a portion with sufficient collar and a portion without. By averaging, a scaler may not take a grade reduction when one is required, and may take an excessive reduction when a portion of the collar actually does meet the grade requirement.

The following guidelines are used to help ensure consistency in assessing collars:

- collar thickness is obtained by direct measurement of the collar with the scale stick at the log end in which the defect appears, including flared butt logs,

- if adequate collar is found on the cut face of a flared butt log, there will be adequate collar where the butt diameter was callipered,

- where a defect runs a partial length of a log, the measured collar thickness is presumed to hold true for the entire length affected by the defect, except for cone shaped defects (butt rot),

- where a defect runs the full length of a log, the collar determination made at each end is presumed to hold true for half the length of the log, and

- where a defect is located so that merely a portion of a collar is below the minimum requirement, only that portion is considered grade reduction and added to any other grade reduction.

Collar thickness principles are provided in the Figures 8.15, 16, 17, without showing trim allowance. Trim allowance is added after any collar assessments.

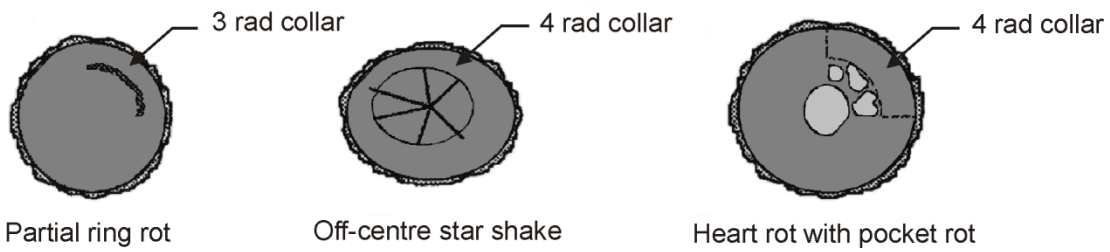

Figure 8.15 Examples of Logs with a Portion of the Collar Too Thin to Produce Lumber.

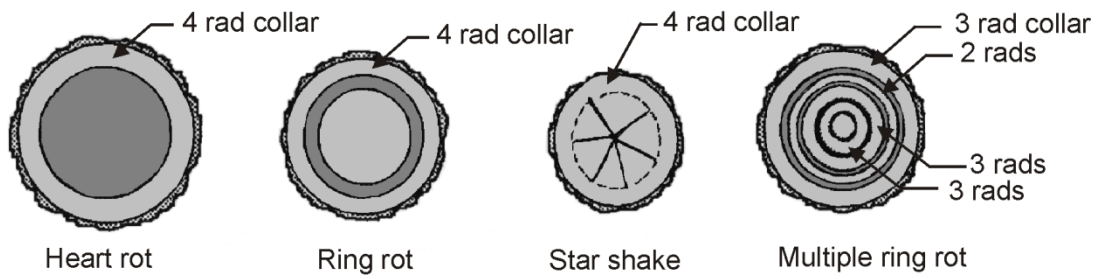

Figure 8.16 Examples of Logs with Entire Collar Too Thin to Produce Lumber.

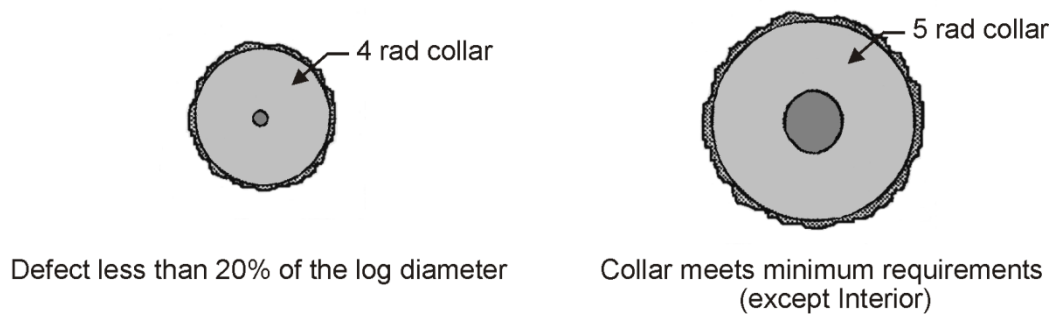

Figure 8.17 Examples of Logs with Sufficient Collar to Produce Lumber.

8.5.3 Determining Grade Reduction for Sound Hearts (Residual Cores)

Sound hearts inside defects such as sap rot, charred wood, ring rot and ring shake are considered suitable for lumber production if they are 5 rads (10 cm) or more in diameter. Hearts less than 5 rads are included in the grade reduction. The treatment of sap rot is illustrated starting on the next page.

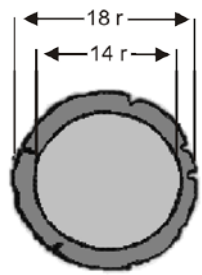

Figure 8.18 Sap Rot.

The first example here shows the end of a log with sap rot with an outer diameter of 18 rads and a residual core diameter of 14 rads. The grade reduction is the outer portion of the log for the distance the rot travels. From the scale stick:

Gross unit volume	=	UV 18 r	=	102 dm^3		
Grade reduction	=	UV 18 r – UV 14 r	=	(102 – 62)	=	40 dm^3
% of log which can be manufactured	=		=	$\frac{102-40}{102} \times 100$	=	60.8 percent

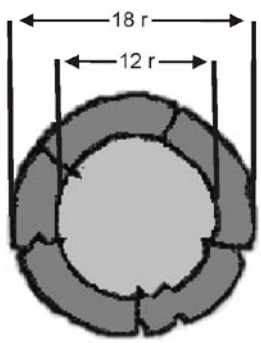

Figure 8.19 Advanced Sap Rot.

The second example shows relatively advanced sap rot with an outer diameter of 18 rads and a residual core diameter of 12 rads. Advanced sap rot like this often requires an additional firmwood adjustment to account for irregular rot penetration, and a further grade adjustment for checks that penetrate into the sound core.

From the scale stick:

Gross unit volume	=	UV 18 r	=	102 dm^3		
Grade reduction	=	UV 18 r – UV 12 r	=	102 – 45)	=	57 dm^3 per metre
% of log which can be manufactured			=	$\frac{102-57}{102} \times 100$	=	44.1 percent

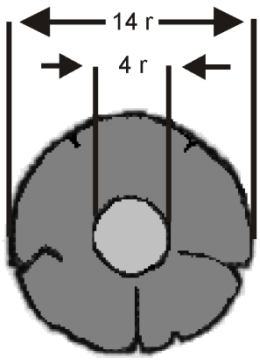

Figure 8.20 Residual Core is a Grade Reduction.

This example shows a log with sap rot which has advanced to the point where the residual core is less than 5 rads (10 cm) in diameter at the top. This log is 100 percent grade reduction for the distance the rot travels. However, if this sap rot presented at the butt end of the log, this log would Grade ’Z’ based on Section 9.5.1.1(1)(c).

8.5.4 Determining Grade Reduction for Multiple Defects

Occasionally, scalers will encounter log ends with two or more defects positioned such that there is less than 5 rads (10 cm) of usable fibre available between the defects. In these situations, simply adding the trim around each defect and calculating the grade reduction would understate the recovery loss . In such cases, the available material separating the defects is also unsuitable for manufacture and is added to the grade reduction.

Area Available to Cut Lumber

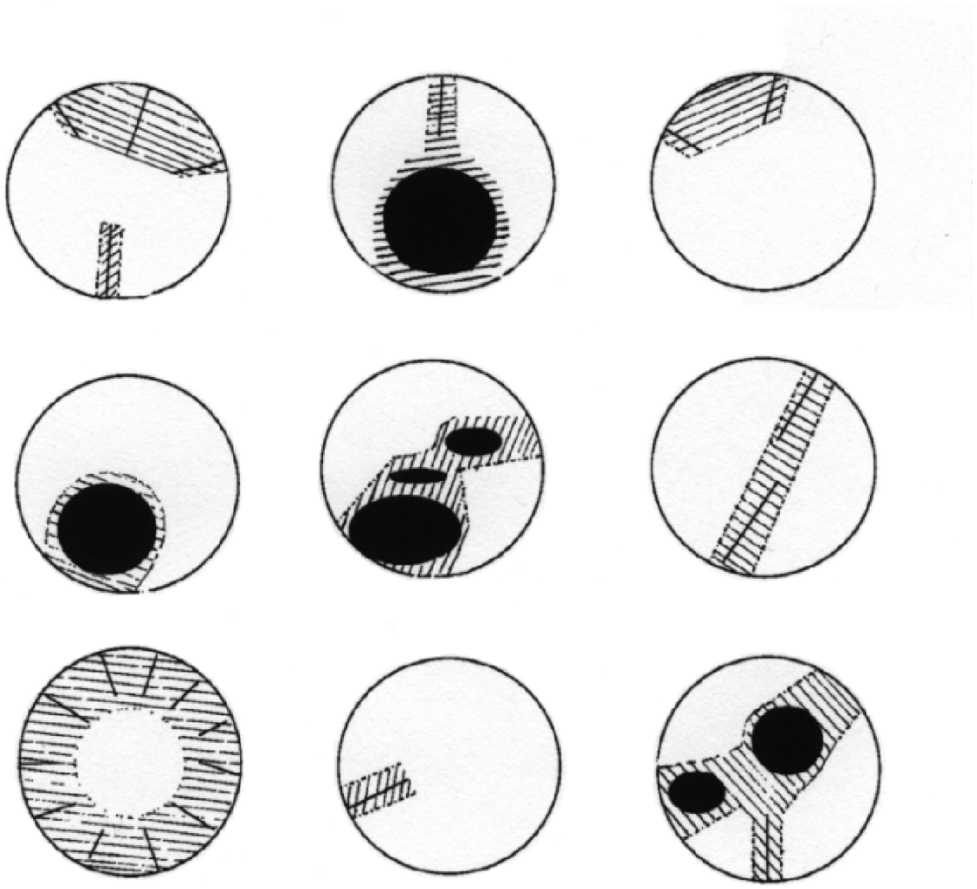

Figure 8.21 Shaded Areas are Unsuitable for the Recovery of Lumber.

The shaded areas in these examples represent the area that has been lost to defects in each illustration. When checks are in conjunction with other defects consideration must be given to the area between these defects to assess manufacturability. **The challenge for the scaler is to decide if the log has 10 cm between defects.**

8.5.5 Slab Thickness and Grading

To be considered suitable for various grades, slabs must achieve a certain minimum thickness. For interior grading, slabs or portions must be at least 7.5 rads (15 cm) thick to be considered suitable for manufacture into lumber. For the interior, portions of slabs that do not meet the minimum thickness must be assessed as grade reduction. This includes measured lineal portions since, unlike collars on round logs that can be measured only on the ends, slab thicknesses can be measured at any point along their length.

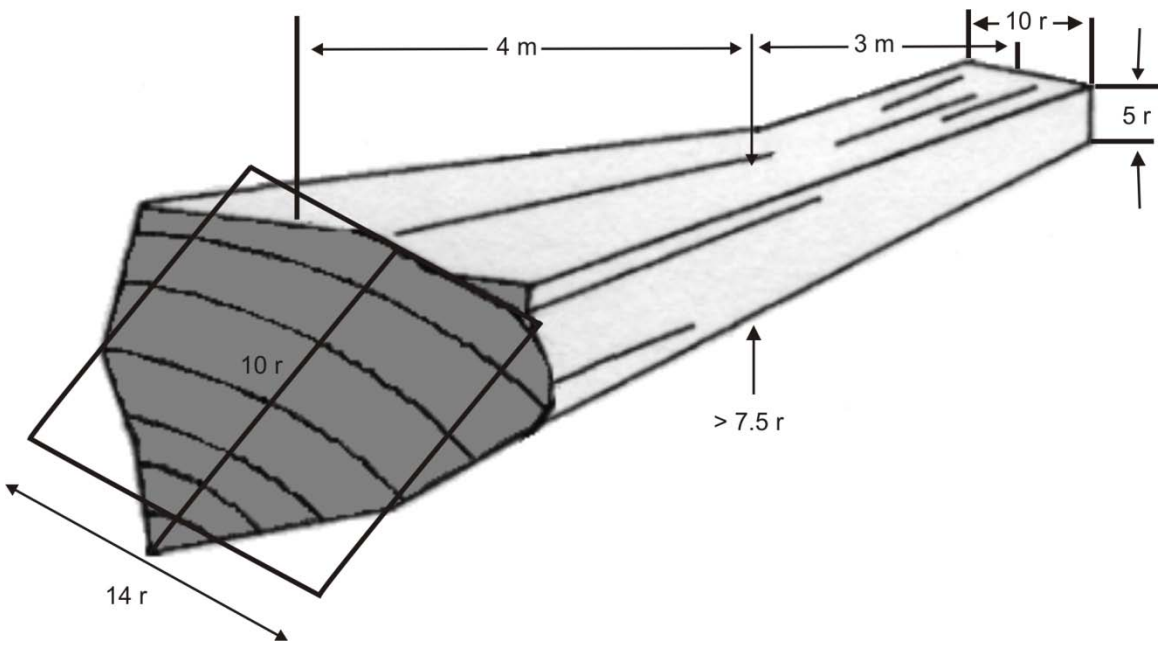

Figure 8.22 Slabs with Portions Meeting the Grade Rule.

This slab is measured for firmwood content according to the methods described in the Gross Measurements Procedures chapter, where the cut faces are enclosed in a rectangle that has an area equivalent to the slab end. The dimensions are 7 by 14 rads and 5 by 10 rads by 7 m, and an equivalent radius class unit is found for each end of the slab using the rectangular formula:

Slab Unit volume, big end	=	10 x 14 x 0.4	=	56 dm^3
Slab Unit volume, small end	=	05 x 10 x 0.4	=	20 dm^3
Average unit volume	=	(56 + 20) / 2	=	38 dm^3
Gross volume	=	38 x 7 m	=	266 dm^3

In the Interior a further calculation is necessary to account for portions of slab that are less than 7.5 rads in thickness. The portion of the slab less than 7.5 rads thick is 3 m long. The width at 3 m from the small end is 12 rads. The interior volumetric calculation is:

Unit volume @<7.5r	=	7 x 12 x 0.4	=	34
Unit volume, small end	=	5 x 10 x 0.4	=	20
Average unit volume	=	(34 + 20)/2	=	27 dm^3
Grade reduction volume	=	27 x 3m	=	81 dm^3
% of slab which can be manufactured	=	$\frac{266 - 81}{266} \times 100$	=	69.5 percent

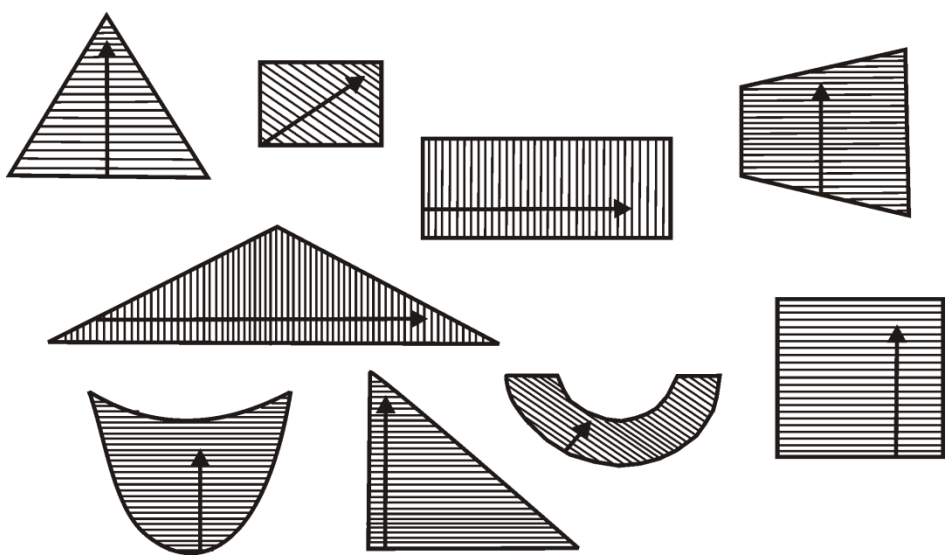

Figure 8.23 Measure Minimum Thicknesses at Right Angles to the Grain.

For grading purposes, the maximum thickness at **right angles** to the growth rings where a 2 rad board can be cut is used to determine the minimum thickness for grading purposes.

The specified minimum thicknesses in the *Schedule of Grade Rules* are the actual and unrounded measurements measured at right angle to the growth rings.

8.5.5.1 For Coastal Grades

1. Slabs are not permitted in the peeler B and C grades and the sawlog J grade.

2. Slabs must be at least 38 cm (19 rads) to qualify for classification as D, E, F, G, H, I and K grades, and meet the minimum diameter for the grade.

3. The minimum slab thicknesses for the shingle grades are specified in the grade rule for each grade.

4. To qualify for the utility U grade slabs must be at least 16 cm (8 rads) thick with a mean diameter of 8 rads, and a shape suitable for lumber manufacture.

5. To qualify for the utility X grade slabs must be at least 10 cm (5 rads) thick, meet the grade rule minimum diameter of 5 rads and have a shape suitable for lumber manufacture.

6. Slab thicknesses specified are actual unrounded measurements.

8.5.5.2 For Interior Grades

1. Slabs must be at least 20 cm thick and 20 cm in width to qualify for grade code 1.

2. 15 cm thick and 15 cm wide to qualify for grade code 2.

3. 10 cm thick and 10 cm wide to qualify for grade code 4.

4. That portion of a slab less than 10 cm in thickness qualifies for grade code Z.

8.6 Determining Trim Allowance

Trim allowance is included in the grade reduction and refers to the firmwood surrounding rot and other internal defects that are lost to lumber recovery when squaring up the areas adjacent to a defect. The standard trim allowance is 1 rad (2 cm) on all sides of the defect if the collar thickness requirements are met.

Once the trim allowance has been added, the total dimension is inserted into the appropriate formula and the individual grade losses for the measured defects are calculated. The individual losses are then added together to derive the total grade reduction.

The conventions associated with trim allowance are:

- Trim allowance is added to internal defects such as heart rot, through running butt rot, pocket rot, ring rot, ring shake, water shake, heart shake, star check, deep surface checks, and fractures.

- Trim allowance is not added to external defects such as sap rot, cat face, missing wood, shallow surface checks, sweep, crook, pistol grip, charred wood, and goitre.

- Ring rot, ring shake, and water shake are characterized by having one or more collars of firmwood, interspersed by concentric rings or partial rings of defect surrounding one central core of firmwood. Trim allowance is applied to firmwood adjacent to the defect(s) as follows:

    - where the collar outside a ring defect and the core inside are both thick enough to produce lumber, a trim allowance is added to both the collar outside of the defect and the core inside of the defect in calculating the grade reduction,

    - where a sound collar does not meet the minimum thickness required to produce lumber, trim allowance is neither added to the collar nor to the core; the entire collar is included as grade reduction, and the entire core is considered to be available for manufacture (where the residual core is at least 10 cm in diameter),

    - where a sound core does not meet the minimum diameter of 5 rads (10 cm) trim allowance is not added to the core; the entire core is included as grade reduction, and trim allowance is added to the collar surrounding the core if it meets minimum thickness requirements.

    - where both the collar(s) and core do not meet the minimum thickness required to produce lumber, the length of the log affected is included as grade reduction, and

    - where there are multiple rings of defect, trim allowance is added to each collar which meets the minimum thickness required to produce lumber.

- Trim allowance is added to the collar of firmwood surrounding the core of rot in heart rot and through running butt rot if the collar meets the minimum thickness required to produce lumber.

- Trim allowance is added to all sides of pocket rot whether enclosed in a circle, square or rectangle. Where numerous pockets are separated by less than 5 rads (10 cm) of firmwood, trim allowance is added around the group of pockets and the entire area of firmwood between the pockets is included as grade reduction.

- Scattered, sporadic or multiple defects with less than 5 rads (10 cm) between defects must be enclosed in the appropriate shape with trim allowance added only if collar/core requirements are met. Areas of firmwood between defects that are less than 5 rads (10 cm) are included in the grade reduction.

- Trim allowance is added to both sides of single shakes, deep checks, and fractures. If they are irregular, the total width of the irregularity is determined and the trim allowance added to it.

- Star shakes and multiple deep surface checks are trimmed out in their entirety. The average diameter of a circle or ellipse to just enclose the star check or to just exclude the deep surface checks is used to determine the grade reduction.

- Spiral checks are trimmed out in their entirety. The amount of twist in the check is observed or calculated over a given length.

The following figures demonstrate the principles of trim allowance in calculating grade reductions.

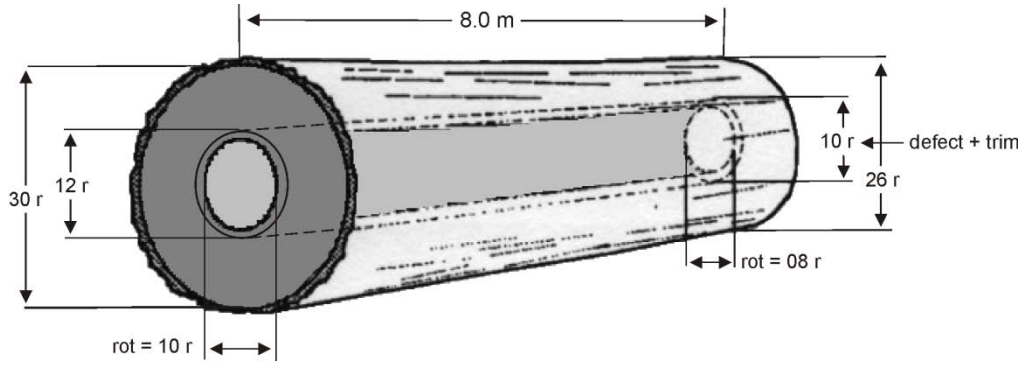

Figure 8.24 The Application of Trim Allowance Around Heart Rot and Hole.

This first log has a rot diameter of 8 rads at the top and 10 rads at the butt. The grade reduction will be for a 10 rad top defect and a 12 rad butt defect after the 1 rad trim allowance is added around the defect. From the scale stick:

Gross volume	=	8 m/26 r/30 r	=	(849 + 1131)	=	1980 dm^3
Grade reduction	=	8 m/10 r/12 r	=	(126 + 181)	=	307 dm^3
% of log which can be manufactured			=	$\frac{1980 - 307}{1980} \times 100$	=	84.5 percent

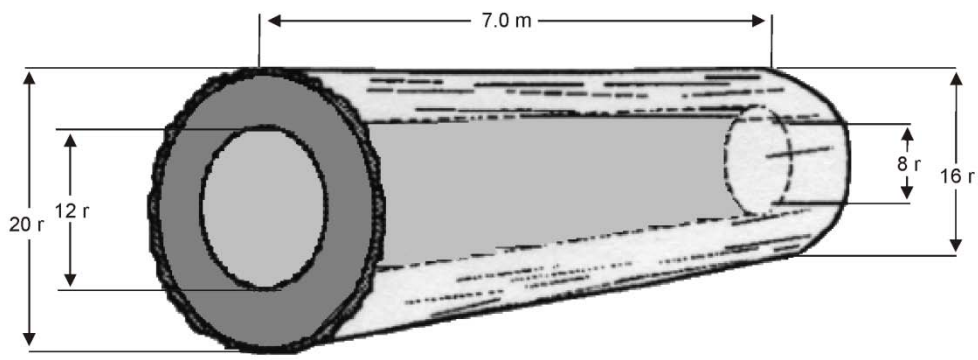

Figure 8.25 Collar Too Thin to Cut Lumber.

This example in Figure 8.25 has a collar thinner than the 5 rad minimum thickness requirement so the entire log is grade reduction. It is unnecessary to add trim allowance.

Collar thickness is always measured exclusive of trim

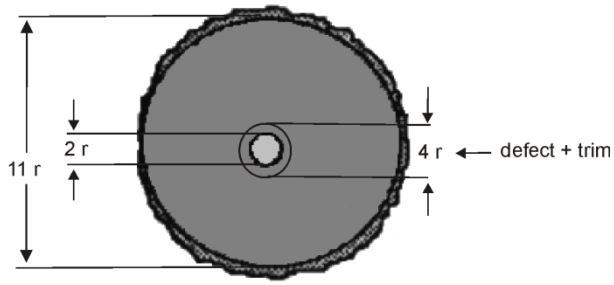

Figure 8.26 Trim and the Twenty Percent Rule.

An exception to the grade rule is this example in Figure 8.24. It has a heart defect diameter not more than 20 percent of end log diameter (2 rads divided by 11 rads times 100 = 18 percent) and the residual collar is less than 5 rads thick. If the heart defect is not more than 20 percent of the end diameter, collar thickness is not considered and trim allowance is added. Therefore, in this example, the grade reduction per metre of length from the scale stick is:

Gross volume per metre (11 r)	=	Unit volume: log	=	38 dm^3
Grade reduction per metre (04 r)	=	Unit volume: defect	=	5 dm^3
% of log which can be manufactured	=	$\frac{38 - 05}{38} \times 100$	=	86.8 percent

8.6.1 The Application of Trim Allowance for Butt Rots

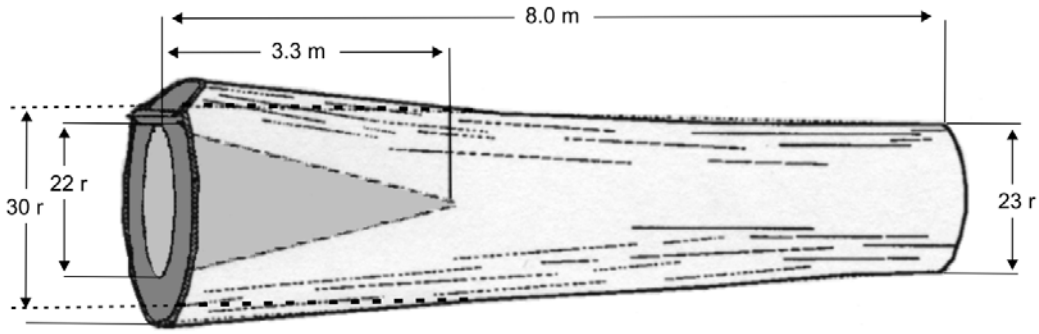

A log with simple butt rot estimated to penetrate 3.3 metres into the log (22 x 0.15 = 3.3m).

Figure 8.27 Simple Butt Rot.

Figure 8.27 is the exception to the convention of adding trim allowance to a collar of firmwood. Because conical butt rot has a much more variable and complex effect on grade reduction, a number of approaches to a reasonable solution have been tested. Of those methods, doubling the firmwood deduction is a reliable and simple convention, which allows for both trim allowance and minimum collar requirements.

With the scale stick:

Gross volume	=	8 m/23 r/30 r	=	(665 + 1131)	=	1796 dm^3
Cone volume	=	3.3 m/22 r	=	$\frac{(251+251)}{3}$	=	167 dm^3
Grade reduction	=	167 x 2	=	334 dm^3		
% of log which can be manufactured			=	$\frac{1796-334}{1796}$ x 100	=	81.4 percent

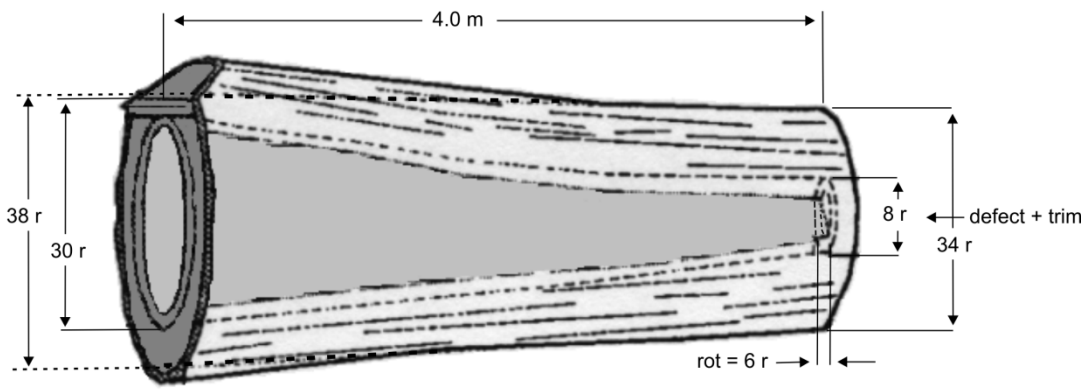

Figure 8.28 Through Running Butt Rot.

The second example of butt rot in Figure 8.28 follows the standard convention for adding trim allowance because the butt rot takes the form of heart rot. However, in the case of through running butt rot with the rot diameter at the butt more than 1.5 times the rot diameter at the top, an overstatement of the grade reduction may result from summing the half volumes or from finding the average unit volume. And, because of the neiloid or "golf tee" shape of the rot in this example, the grade reduction may be based on the average of the two diameters, which is nearer to the true volume of the defect. If the shape of the rot is presumed to be a frustum of a cone, it is necessary to increase the average diameter. If the shape is presumed to be parabolic or "bullet" shape, half volumes or average unit volumes may be used. See the example in the Measurements chapter showing a volume deduction for conoid through running butt rot. In this example, it is assumed that the collar is thick enough to cut lumber. Where the collar does not meet the minimum thickness, the lineal portion of the log without collar must be included as grade reduction. The collar thickness is determined by actual measurement. It is not half the difference between the projected butt diameter and the defect diameter.

From the scale stick:

Gross volume	=	4 m/34 r/38 r	=	(726 + 907)	=	1633 dm^3
Average defect diameter			=	$\frac{10+30}{2}$	=	20 rads
Grade reduction	=	4 m/20 r/20 r	=	(251 + 251)	=	502 dm^3
% of log which can be manufactured			=	$\frac{1633 - 502}{1633} \times 100$	=	69.3 percent

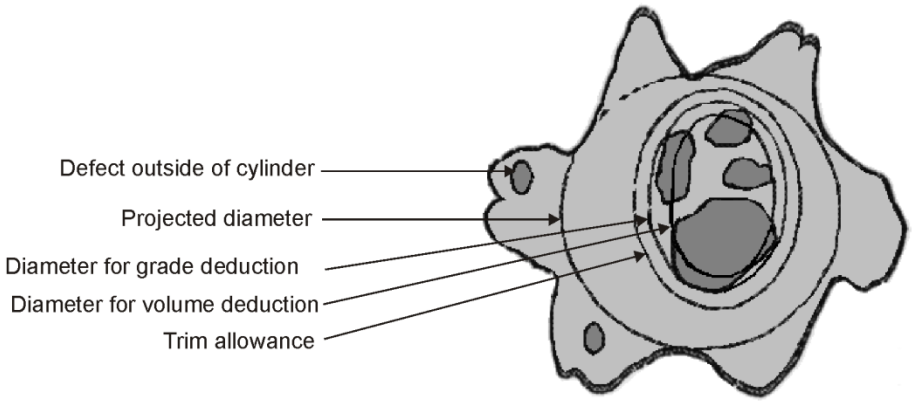

Figure 8.29 Irregular Butt Defects in a Fluted Butt Log.

The third example in Figure 8.29 shows scattered butt rot. Irregular or sporadic rot and water shake and those with defect extending into the collar will require a significantly larger initial measurement (before adding trim) than what would be used for a firmwood deduction. The illustration includes the following relationships:

- any defects outside of the gross butt diameter (projected butt diameter) are not considered for either firmwood deduction or grade reduction, although these defects may serve to indicate the severity of a butt defect. i.e. the distance it penetrates up the log,
- the grade reduction diameter is increased to include all the rot and other defect within the cutting cylinder that affects lumber recovery,
- trim allowance is added to the diameter for grade reduction in through running butt rot, and
- when two or more defects are positioned such that there is less than 5 rads (10 cm) of usable fibre available between the defects, the available material separating the defects is also unsuitable for manufacture and is included in the grade reduction.

8.6.2 Trim Allowance and Ring Shake

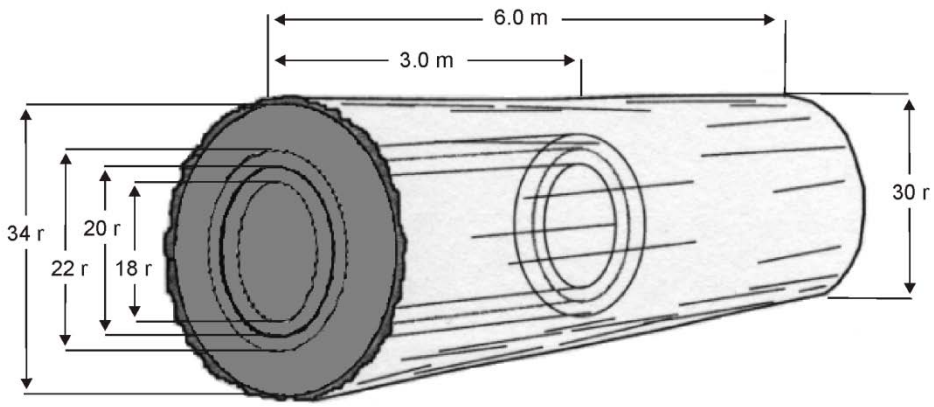

Figure 8.30 Ring Shake and Both Collar and Core are Thick Enough to Produce Lumber.

The example in this figure shows a log with ring shake that is estimated to penetrate one-half of the log length. Because the collar meets the minimum collar requirements, add a 1 rad trim allowance on both sides of the shake and deduct the volume of a 2 rad ring.

From the scale stick:

Gross volume	=	6 m/30 r/34 r	=	(848 + 1090)	=	1938 dm^3
Grade reduction	=	UV 22 r - UV 18 r for 3 m		(152 - 102) x 3	=	150 dm^3
% of log which can be manufactured			=	$\frac{1938-150}{1938}$ x 100	=	92.3 percent

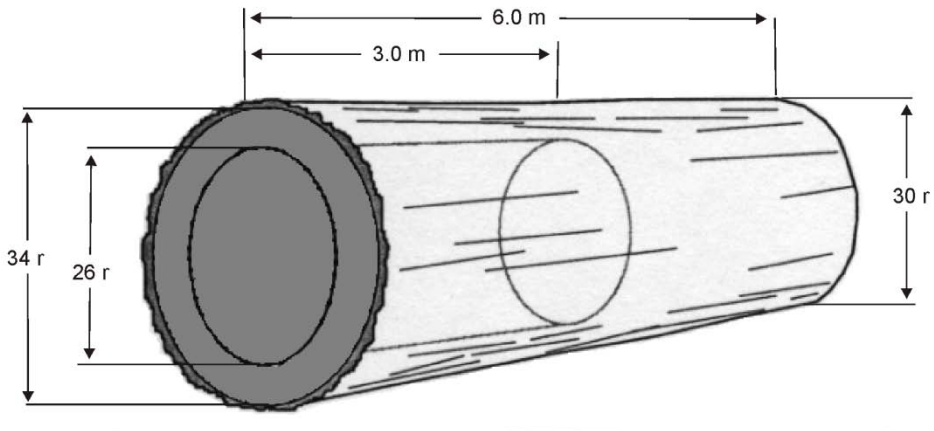

Figure 8.31 Ring Shake and Only the Core is Thick Enough to Produce Lumber.

Figure 8.29 shows a log with the same gross dimensions as the first log, but the ring shake is positioned so that the collar of firmwood is less than the minimum thickness requirement of 5 rads. Because the entire collar is a grade reduction, the entire core is considered suitable for recovery, and no trim allowance is added.

From the scale stick:

Gross volume	=	6 m/30 r/34 r	=	(848 + 1090)	=	1938 dm^3
Grade reduction	=	UV 34 r - UV 26 r for 3 m	=	(363 - 212) x 3	=	453 dm^3
% of log which can be manufactured			=	$\frac{1938 - 453}{1938} \times 100$	=	76.6 percent

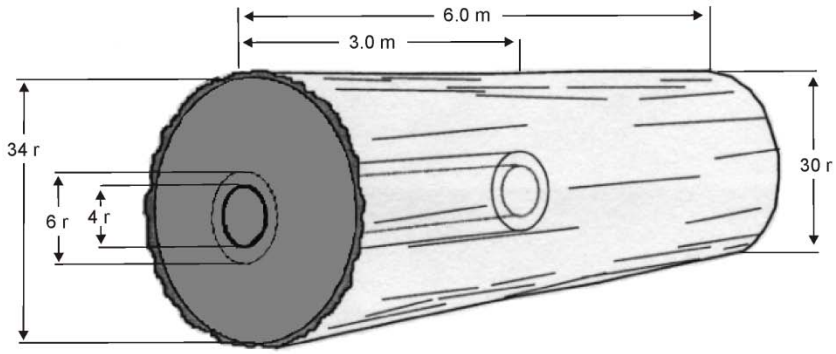

Figure 8.32 Ring Shake and Only the Collar is Thick Enough to Produce Lumber.

This example shows a log with the same gross dimensions as the first two examples but the core of firmwood is less than the minimum core thickness of 5 rads (10 cm). Because the core is a grade reduction, trim allowance is added only to the collar.

From the scale stick:

Gross volume	=	6 m/30 r/34 r	=	(848 + 1090)	=	1938 dm^3
Grade reduction	=	3 m/6 r/6 r	=	(17 + 17)	=	34 dm^3
% of log which can be manufactured			=	$\frac{1938 - 34}{1938} \times 100$	=	98.2 percent

8.6.3 Trim Allowance and Ring Rot

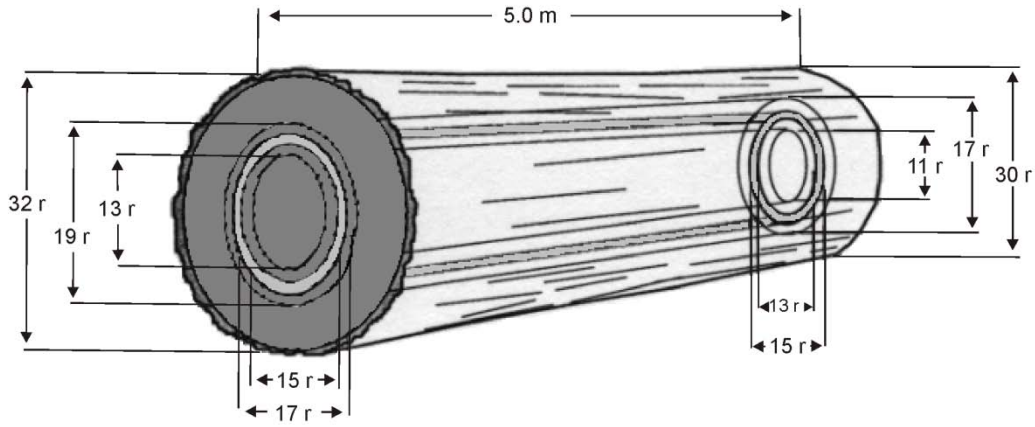

Figure 8.33 Both Core and Collar Meet the Grade Rule.

The figure above shows a log with 1 rad of ring rot penetrating the full length and circumference of the log. Because both the collar and the residual core meet minimum thickness requirements, trim allowance is added to both the collar and the core.

From the scale stick:

Gross volume	=	5 m/30r/32 r = (707 + 804)			=	1511 dm^3
Grade reduction	=	Outside cylinder 5 m/17 r/19 r			=	(227 +284) = 511 dm^3
less	=	Inside cylinder 5 m/11 r/13 r			=	(95 + 133) = 228 dm^3
	=	(511 - 228)	=	283 dm^3		
% of log which can be manufactured			=	$\frac{1511 - 283}{1511} x100$	=	81.3 percent

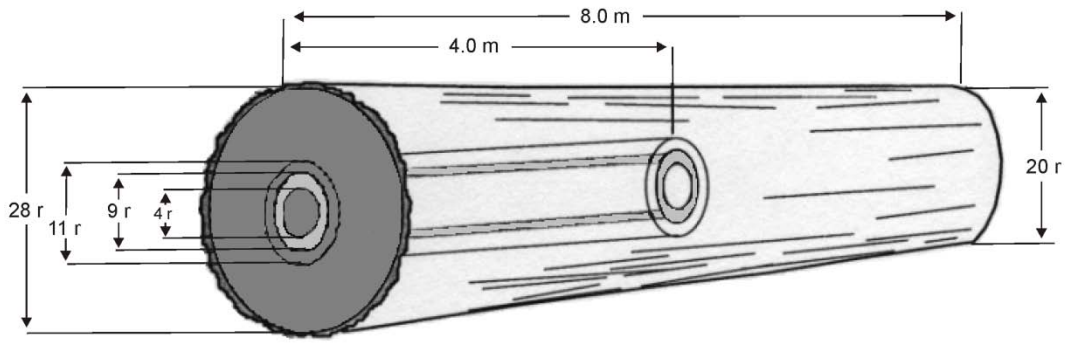

Figure 8.34 Only the Collar Meets the Grade Rules.

This example in Figure 8.34 shows a log where the sound heart is only 4 rads, which is less than the 5 rads (10 cm) required to cut lumber. Because the entire core is a grade reduction, trim allowance is added only to the collar.

With the scale stick:

Gross volume	=	8 m/20 r/28 r	=	(503 + 985)	=	1488 dm^3
Grade reduction	=	4 m/11 r/11 r	=	(76 + 76)	=	152 dm^3
% of log which can be manufactured			=	$\frac{1488-152}{1488} \times 100$	=	89.8 percent

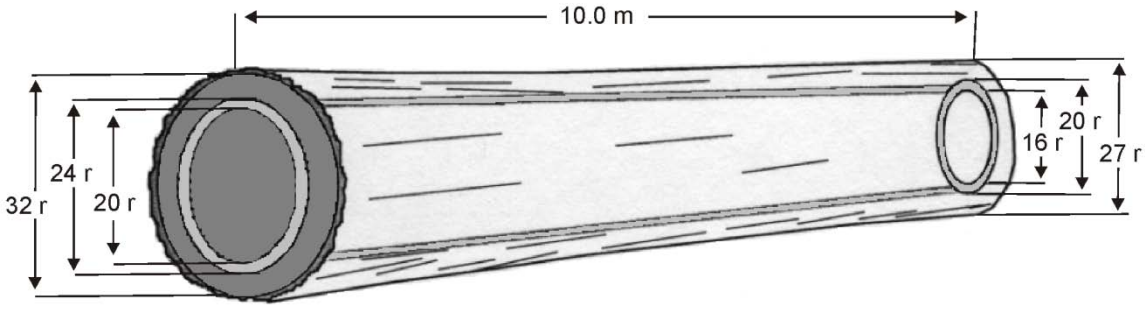

Figure 8.35 Only the Core Meets the Grade Rule.

This example in Figure 8.35 shows a log where the sound collar is less than the minimum thickness required to cut lumber. Trim allowance is not added to either the collar or the core; the entire collar is grade reduction and the entire core is available for manufacture (when it is 5 rads or more in diameter).

From the scale stick:

Gross volume	=	10 m/27 r/32 r	=	(1145 + 1608)	=	2753 dm^3
Volume available	=	10 m/16 r/20 r	=	(402 + 628)	=	1030 dm^3
Grade reduction	=	2753 – 1030	=	1723 dm^3		
% of log which can be manufactured			=	$\frac{2753-1723}{2753} \times 100$	=	37.4 percent

8.6.4 Trim Allowance and Multiple Ring Rot

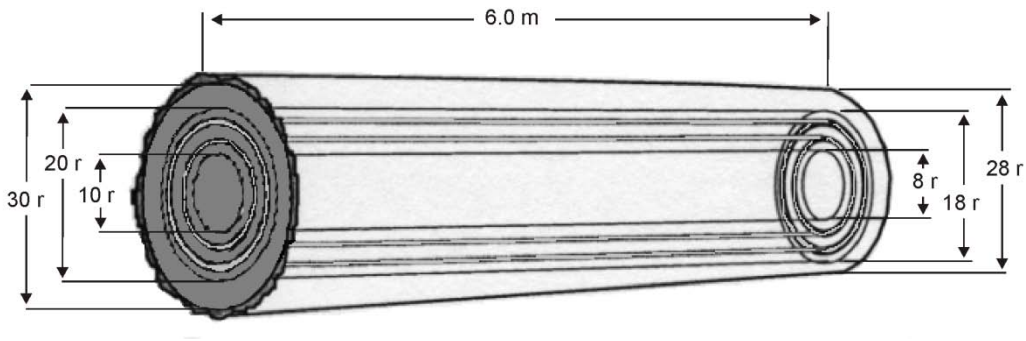

Figure 8.36 Muliple Ring Rot and the Firmwood Between Rings is Less Than 5 Rads.

This example shows a log with two 1 rad rings of rot penetrating the full length and circumference of the log. Because both the collar and the residual core meet minimum thickness requirements, trim allowance is added to both the outer collar and the core, but the residual collar between the two rings does not meet the requirements, and it is grade reduction. If the outer collar and core also did not meet the minimum requirements, the whole log would be grade reduction.

From the scale stick:

Gross volume	=	6 m/28 r/30 r	=	(739 + 848)	=	1587 dm^3
Grade reduction	=	Outside cylinder 6 m/18 r/20 r = (305 + 377)			=	682 dm^3
less	=	Inside cylinder 6 m/08 r/10 r = (60 + 94)			=	154 dm^3
	=	(682 - 154)	=	528 dm^3		
% of log which can be manufactured			=	$\frac{1587-528}{1587} \times 100$	=	66.7 percent

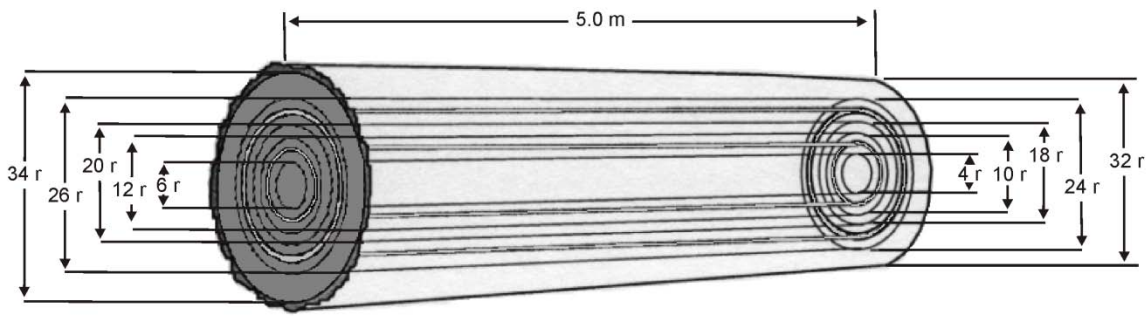

Figure 8.37 Multiple Ring Rot and the Firmwood Between Rings is 5 Rads or More.

The example above shows a log with two 1 rad rings of rot penetrating the full length and circumference of the log. Because both collars and the residual core meet minimum thickness requirements, trim allowance is added to both collars and the core. Although the number of dimensions shown in this example appears to represent a complex situation, there is only one extra step involved, and as with calculating the firmwood deduction, the work is done progressively, from the outside ring to the inside ring.

From the scale stick:

Gross volume	=	5 m/32 r/34 r	=	(804 + 908)	=	1712 dm^3

Outside ring:

Grade reduction	=	Outer cylinder 5 m/24 r/26 r = (452 + 531)			=	983 dm^3
less	=	Inner cylinder 5 m/18 r/20 r = (254 + 314)			=	568 dm^3
	=	(983 - 568)	=	415 dm^3		

Inside ring:

Grade reduction	=	Outer cylinder 5 m/10 r/12 r = (79 + 113)			=	192 dm^3
less	=	Inner cylinder 5 m/04 r/06 r = (13 + 28)			=	41 dm^3
	=	(192 - 41)	=	151 dm^3		
Sum of grade reduction			=	(415 + 151)	=	566 dm^3
% of log which can be manufactured			=	$\frac{1712-566}{1712}$x100	=	66.9 percent

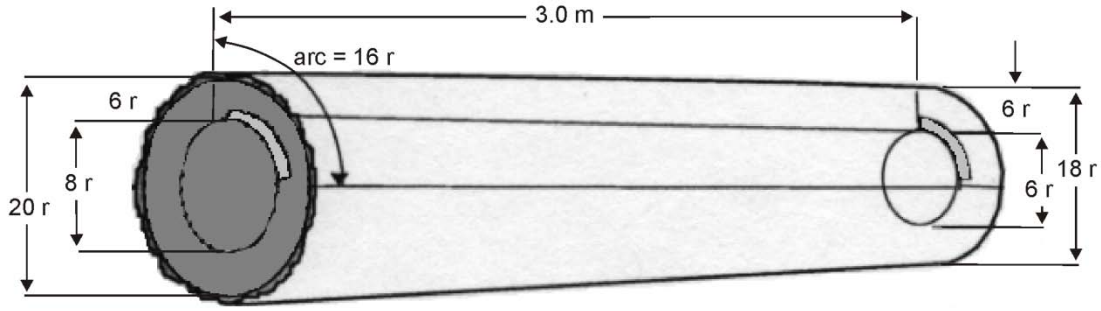

Figure 8.38 Partial Ring Rot 2 Rads Thick.

The example above shows a log with a partial ring of rot penetrating the full length and 1/4 of the circumference of the log. Because the collar does not meet the interior minimum thickness requirement, the entire portion of collar between the ring rot and the bark is grade reduction, and the entire core is available for manufacture. As with firmwood deductions, a factor is applied to obtain the net grade reduction. This factor may be easily visualized, if it is in simple fractions such as 1/4, 1/3, and 1/2. It can be calculated as a ratio of the circumference by multiplying the diameter by the factor and dividing the result into the arc of the defective sector, but finding the arc is not practical with conventional scaling tools, so an acceptable alternative may be used. Degree of arc is one option, using a watch or compass dial to learn to visualize sectors which are not obvious divisions of 360 degrees.

Factor from formal calculation:

Radius times π	=	20 *x* 3.14159	=	63 r circumference
Defect arc factor	=	16 r arc ÷ 63	=	1/4 or 0.25 or 25 percent

Factor from a clock face, major divisions in 12ths (secondary divisions in minutes or 60ths, which are equal to 6 degrees/minute):

Position of hands	=	12:00 to 3:00	=	15 minutes
Defect arc factor	=	15 divided by 60	=	0.25 or 25 percent

Factor from arc

Position from North	=	90 degrees		
Defect arc factor	=	90 divided by 360	=	0.25 or 25 percent

There are several incremental options available to the scaler just from these two common objects, and of course, that which is most comfortable and familiar is preferred, even a piece of paper, which may be easily and accurately folded into 16ths.

From the scale stick:

Gross volume	=	3 m/18 r/20 r	=	(153 + 188)	=	341 dm^3
less	=	Inside cylinder 3 m/06 r/08 r/ = (17 + 30)			=	47 dm^3
Grade reduction	=	341 – 47	=	294 *x* factor of 0.25	=	73.5 = 74 dm^3
% of log which can be manufactured			=	$\frac{341-74}{341} x100$	=	78.3 percent

If a scaler encounters rot which does not penetrate the full length of the log, and indicators do not support the convention that it penetrates exactly 1/2 way, the use of unit volumes rather than half volumes is convenient. For example, with an assumption that the rot penetrates only 1.2 m in from the large end, from the scale stick:

Gross volume	=	3 m/18 r/20 r/	=	153 + 188)	=	341 dm^3
Grade reduction	=	UV log (20 r) - UV core (8 r) x factor (.25)			x	length (1.2)
	=	126 - 20) x 0.25 x 1.2 = 106 x 0.25 x 1.2			=	32 dm^3
% of log which can be manufactured			=	$\frac{341-32}{341} x100$	=	90.6 percent

8.6.5 Application of Trim Allowance to Checks and Shake

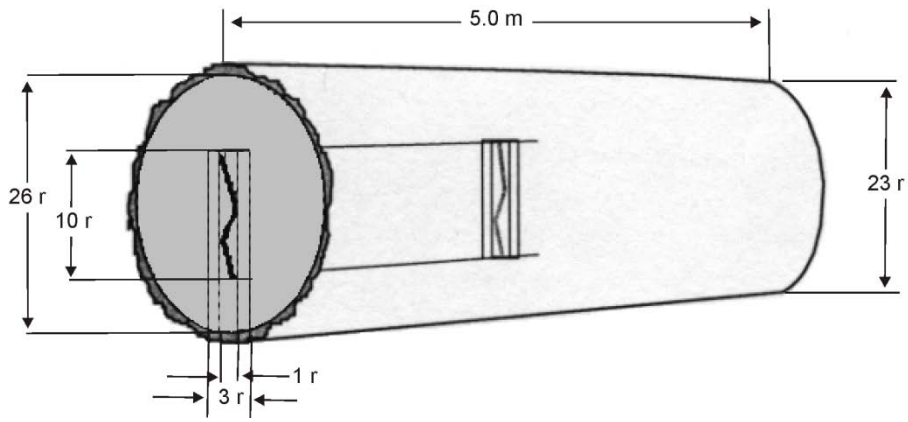

Figure 8.39 Irregular Heart Check.

This log illustrates an irregular heart check estimated to penetrate one-half the length of the log. Because the check is not straight, the area affected is enclosed, and in this case a 1 rad "box" will just contain it. Trim allowance is then added to both sides of the area enclosing the check, so that the grade reduction is for a rectangle 3 rads by 10 rads by 2.5 m. Two common ways of finding the result are described below, depending on scaler preference. The first uses a factor of 0.4 to convert "square rads" times metres to cubic decimetres as follows:

From the scale stick:

Gross volume = 5 m/23 r/26 r/ = (415 + 531) = 946 dm^3

Grade reduction = 3 r x 10 r x factor of 0.4 x 2.5 m

= 3 x 10 x 0.4 x 2.5 = 12 x 2.5 = 30 dm^3

Another popular method to find the grade reduction for rectangular defects is to use centimetres for the width and height of the defect (6 cm by 20 cm by 2.5 m), convert the measurements to decimetres, (cm/10 and m x 10) and calculate the example as follows:

Grade reduction = 6/10 dm by 20/10 dm by 25 dm

= 0.6 x 2 x 25 = 30 dm^3

Either method will produce the same results:

% of log which can be manufactured = $\frac{946-30}{946} x100$ = 96.8 percent

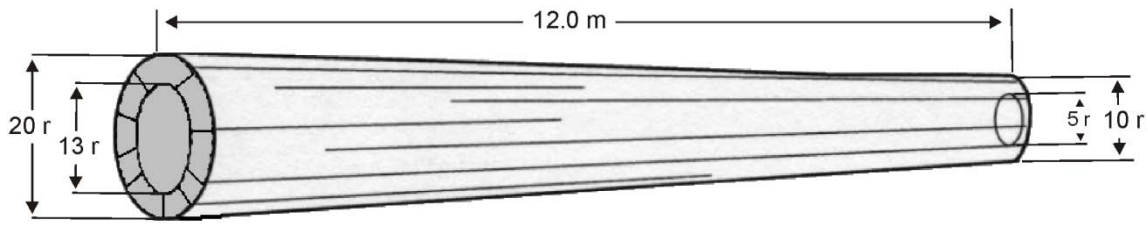

Figure 8.40 Extensive Surface Checking.

This log illustrates multiple deep surface checks that cover the entire log, with the penetration clearly visible on the ends of the log. Here it is estimated that the recoverable core of the log is equal to a 5 rad by 13 rad log 12 m long, after excluding the area affected by the checks.

From the scale stick:

Gross volume	=	12 m/10 r /20 r	=	(188 + 754)		942 dm^3
Volume available	=	12 m/5 r/13 r	=	(47 + 319)	=	366 dm^3
Grade reduction	=	942 – 366	=	576 dm^3		
% of log which can be manufactured			=	$\frac{942-576}{942} \times 100$	=	38.8 percent

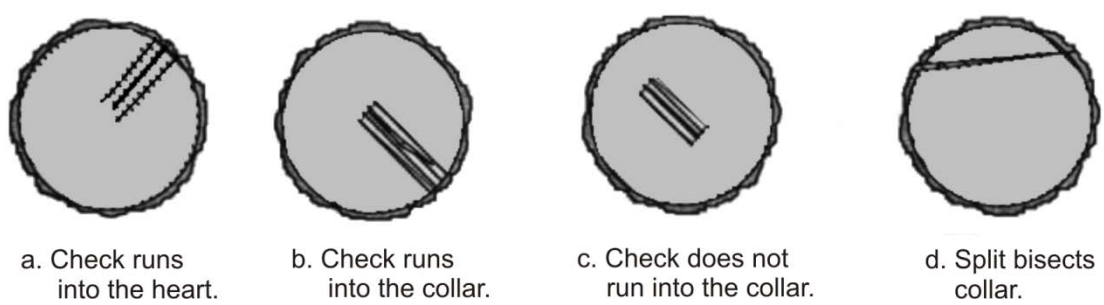

Figure 8.41 Trim Allowance for Check and Split in Relation to Collars.

This example shows four log ends, each with one straight separation, located at different points on the log. Trim allowance is added according to the following conventions:

1. Log "a." has a straight surface check running to the heart. Trim allowance is added to both sides of the check.

2. In log "b.", a heart check runs out at a point less than 5 rads from the bark. Trim allowance is added to both sides of the check and extended to the bark to include the affected portion of collar in the grade reduction.

3. In log "c.", a heart check runs out at a point 5 rads or more from the bark. Trim allowance is added only to the sides of it.

4. In log "d", a split bisects the collar less than 5 rads from the bark. Trim allowance is not added to the split, and the entire segment outside of it is grade reduction.

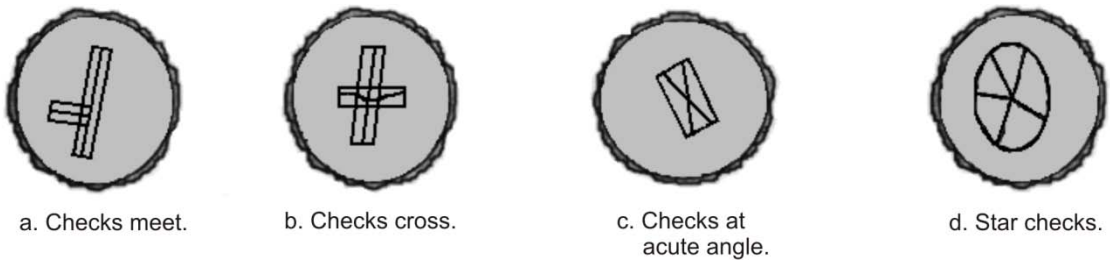

Figure 8.42 Trim Allowance for Multiple Heart Check.

This example shows four log ends with multiple heart check. It is necessary to apply trim allowance in a manner which best accommodates the forms which the check takes. Two conventions allow for the full range of heart checks.

1. Logs "a." and "b." both have two straight heart checks that meet or cross each other, and they are at more or less right angles to each other. It is apparent from this form of separation that it is possible to "square up" around them by adding trim allowance individually to each one.

2. Log "c" also has two straight checks, but they are at too extreme of an angle to each other to consider adding trim allowance to each one. Log "d" has a star check, which is characterized by having more than four points that are asymmetric to each other. In this form of check, trim allowance is added by encircling them, (in a circle or ellipse), because it is not practical to cut lumber from around each one. Depending on the size of the log and the arms of the star check however, it may be possible to cut lumber from between them where any adjoining arms are 5 rads or greater apart. In these cases, the grade reduction should be decreased.

8.6.6 Application of Trim Allowance to Off Centre and Overlapping Defect

Although the two examples below are completely different types of defect, they are treated in a very similar manner to each other, when a heart defect extends into a portion of a collar. The only difference between the two is in the application of trim allowance, as described in the example calculations.

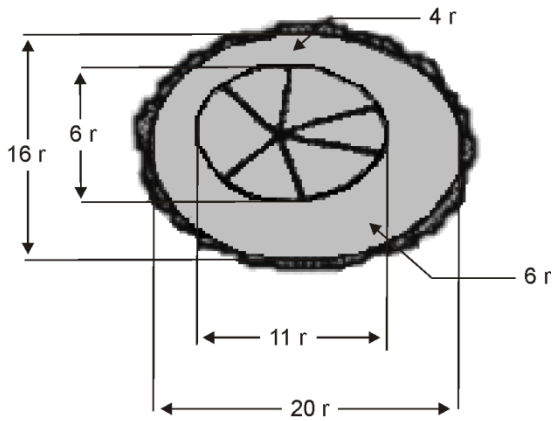

Figure 8.43 The Application of Trim Allowance to Off Centre Defects.

The example above shows the end of a fir log which has grown with an off-centre heart. Typical of this type of log, the defect radiating from the pith is also off centre, and one-half of the collar is too thin to produce lumber (coast). Since there are too many arms to add an allowance to each one, the affected area is completely enclosed in a circle or ellipse. The first grade reduction is for the star check for the distance it is estimated to travel.

From the scale stick:

Gross unit volume	=	UV 18 r	=	102 dm^3		
Grade reduction	=	(6 + 11)/2	=	UV 08 r	=	20 dm^3
Net unit volume	=	102 – 20	=	82 dm^3		

The second grade reduction is for the collar which is less than 5 rads thick for 1/2 the circumference (based on the net unit volume from the first calculation to avoid duplication of the overlapping grade reductions):

Grade reduction	=	82 x 0.5	=	41 dm^3		
Total reduction	=	41 + 20	=	61 dm^3		
% of log which can be manufactured			=	$\frac{102 - 61}{102} x100$	=	40.2 percent

This example also demonstrates the need to go through the calculations to achieve and maintain proficiency. At first glance, a scaler may decide that this log was 100 percent grade reduction, but because the defect is offset, it is not.

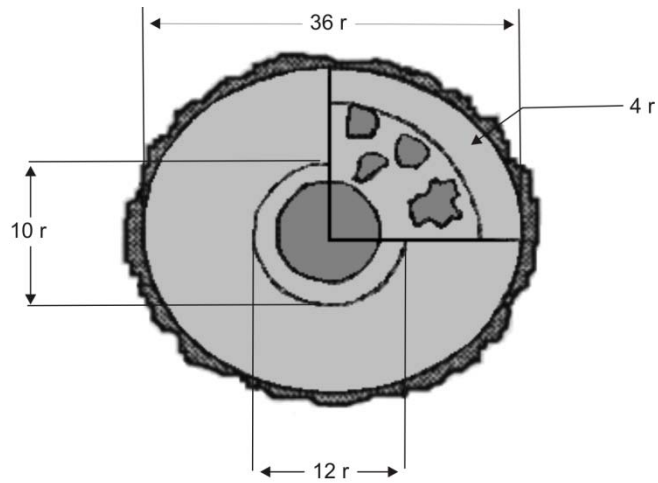

Figure 8.44 The Application of Trim Allowance to Overlapping Defects.

This example shows a log which has a rotten core and scattered pocket rot with less than 5 rads separation between the pockets. The entire area enclosing the pockets is grade reduction, and because the pockets are closer than 5 rads of the bark, the collar is 100 percent grade reduction. Trim allowance is added to the core of rot and to the area enclosed by the pockets. From the scale stick:

The first grade reduction is for the rotten core:

Gross unit volume	=	UV 36 r	=	407 dm^3
Grade reduction	=	UV 12 r	=	45 dm^3
Net unit volume	=	407 – 45	=	362 dm^3

The second grade reduction is for the collar which is less than 5 rads thick for 1/4 the circumference (based on the net unit volume from the first calculation to avoid duplication of the overlapping grade reductions):

Grade reduction	=	362 x 0.25	=	90 dm^3
Total reduction	=	45 + 90	=	135 dm^3

% of log which can be manufactured $= \frac{407-135}{407} \times 100 =$ 66.8 percent

8.6.7 Determining Grade Reduction for Spiral Checks

Where spiral checks occur, the scaler must "block out" the portion of the log affected by a check to calculate the grade reduction. No trim allowance is added to spiral checks.

In field application, this is normally a visual estimate. The scaler can easily assess the lumber loss due to a spiral crack by observing the deviation from a straight line over the length of the log. For example, if a surface check penetrating to the heart follows the spiral grain from "12 o'clock" at one end to "3 o'clock" at the other, the deviation is 3/12, or 25 percent of the log's circumference for the length of the check. The length of a log is important in calculating grade reduction: Logs less than 5 m long are assessed over their entire length. Logs 5 m and longer are assessed on 2.5 m segments.

If a spiral surface check does not penetrate all the way into the heart, the grade reduction is of course less than for a full check, and it is important to understand the relationship between the depth of penetration and the effect on volume. For example, a check penetrating halfway to the heart would have 75 percent of the effect of a full check, because 75 percent of the volume of any round log is contained in the outer half of its radius.

The following examples show the effect of spiral check and heart check on grade reduction for short and long logs, and ways of calculating grade reduction.

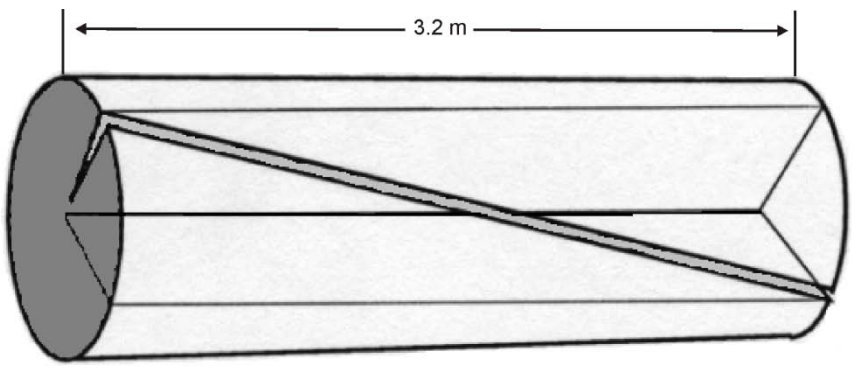

Figure 8.45 Logs Shorter Than 5 Metres are Assessed on Their Length.

The first log shows a uniform spiral check running its full length. Because the log is less than 5 m long, assess the twist on the log length. In field practice, it is only necessary to observe the degree of spiral from one end to the other and estimating the percentage of the log affected, in this case 25 percent of its circumference. Therefore, the grade reduction on the log is also 25 percent.

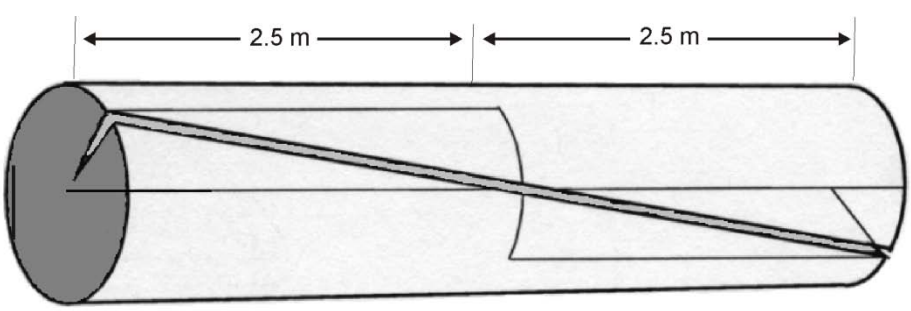

Figure 8.46 Logs 5 Metres and Longer are Assessed in 2.5 Metre Segments.

The second figure shown here also has a uniform spiral check running its full length and affecting 25 percent of its circumference. If a 25 percent grade reduction was taken, however, it is too severe for logs of this length or longer, because lumber recovery is gauged on 2.5 m minimum lengths. Therefore, the log is visually segregated into two segments, each with a 12.5 percent grade reduction.

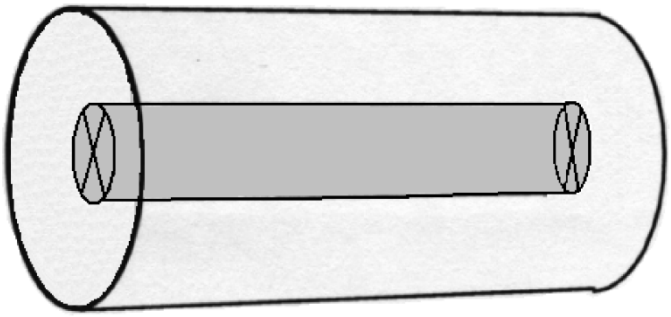

Figure 8.47 Log with Spiral Heart Check.

This log shows a spiral heart check. It may be treated similarly to acute or irregular heart check, as shown in the examples except that trim allowance is not added. That is, the grain deflection is projected to the opposite end of the log, the area affected is enclosed in a circle, and the grade reduction calculated from that.

8.6.8 Determining Lengths for Grading Purposes – Logs and Log Segments

Logs and slabs must be at least 2.5 m long to produce lumber. Logs, slabs, and chunks shorter than 2.5 m are considered to be 100 percent grade reduction. In most instances, the portion of the log's length that is 5 rads (10 cm) or more in diameter is the basis for its grade.

Some situations, however, require the scaler to deem the log to be another length for the purpose of establishing its grade. Where timber has been cut into lengths less than 2.5 m (interior) or 5.2 m (coast); for the purpose of grading they may be deemed to be 2.5 m (interior) or 5.2 m (coast) long if:

- the portion of a log cut from the top of a tree exceeds 5 rads (10 cm) in diameter and the log displays a cut face on the butt end, or
- the log is scaled after it has been bucked at the scale site, or
- if a scaler is instructed under the Scaling Regulation to use deemed lengths for the purpose of grading.

In all instances, breakage is always graded on the basis of its actual length (breakage is defined as any piece, meeting the minimum diameter of the cutting authority, which is shorter than 2.5 m in length and broken at the large end or at both ends).

> For reporting purposes, the actual net length of a log is always recorded on the tally sheet, not the deemed length.

In general, deemed lengths are used in scaling short pieces for two purposes:

- they help to ensure that scaling is consistent with the merchantability specifications, and
- they facilitate more consistent grading decisions.

The following figures demonstrate examples of the principles of length determination for calculating grade reduction in scaling, including situations where short logs are deemed to be another length for purposes of grading.

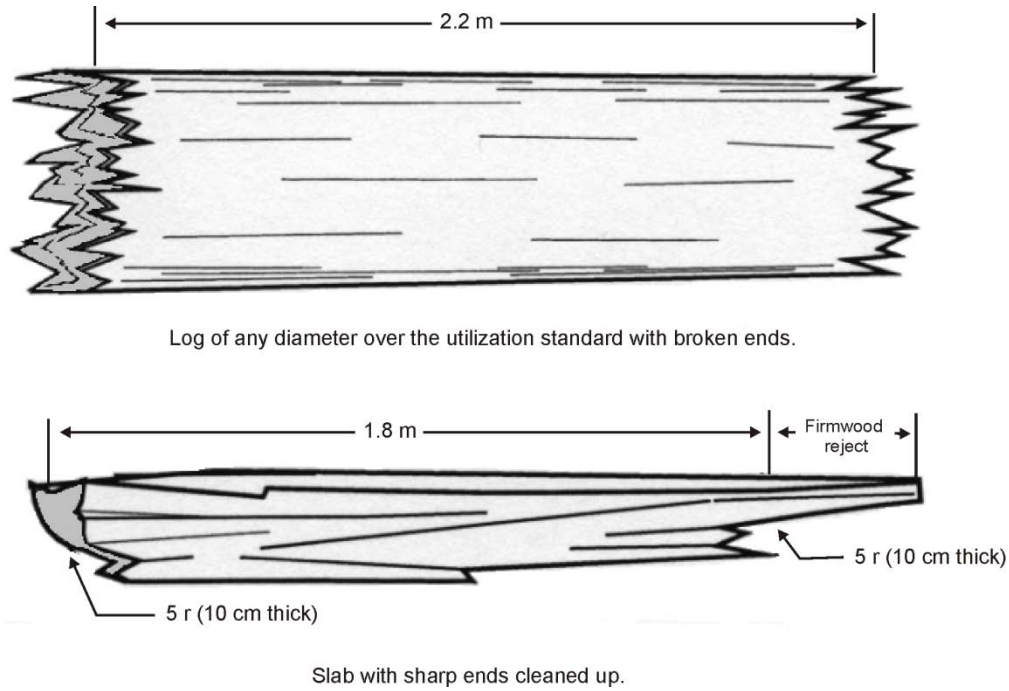

Figure 8.48 Short Breakage Pieces Contained in a Conventional Load.

These logs show two examples of breakage which are graded on the basis that the log length available to cut lumber is less than 2.5 m. These pieces are considered to be normal breakage. If they were broken subsequent to delivery, however, they would be deemed to be 2.5 m (interior), and 5.2 m (coast) for the purpose of grading, excluding the firmwood reject portions.

In breakage, log ends may or may not be "cleaned up" when they arrive at a scale site. It is shown in the second example that the sharp ends have been bucked off for obvious safety reasons, and is most often apparent to the scaler because some signs of breakage are usually showing, such as splits, pulled bark and remaining shatter. Therefore, when assessing these logs, if evidence of breakage is apparent, they are graded on the basis of actual length.

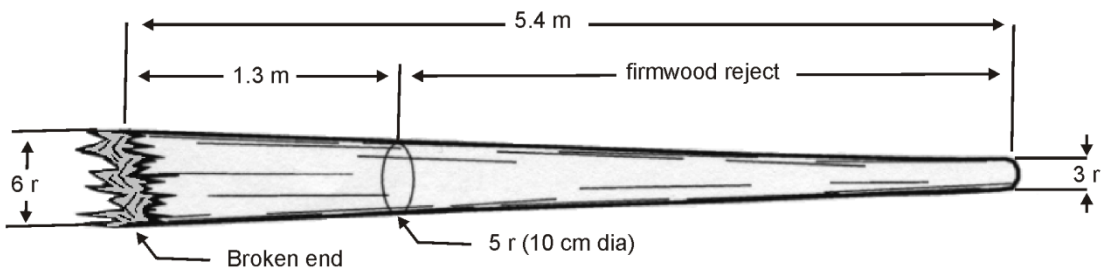

The 1.3 m portion of this log is graded on the basis of its actual length.

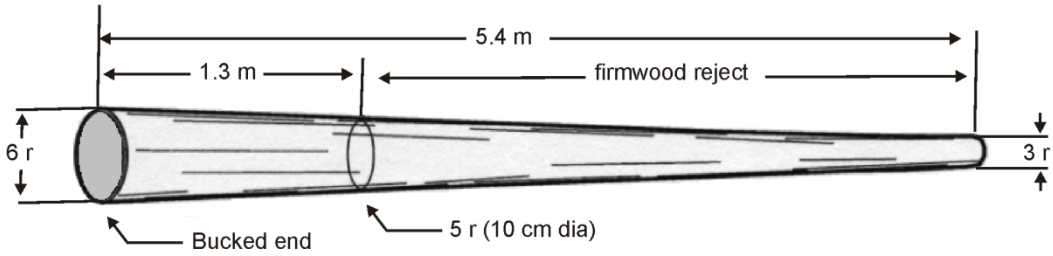

The 1.3 m portion of this log is deemed to be 2.5 m long (Interior) or 5.2 m (Coast).

Figure 8.49 Rat Tail Tops Delivered with a Short Segment Over 10 cm.

The example above shows two similar "rat tail" logs which were delivered to a scale site. For both logs, the portion of the log less than 5 rads (10 cm) in diameter is graded as firmwood reject. The portions of the logs 5 rads (10 cm) and larger , however, are treated differently for grading purposes because one log is normal breakage, and the other is "bucking waste"; it should have been bucked at the point where the log became 5 rads (10 cm) in diameter.

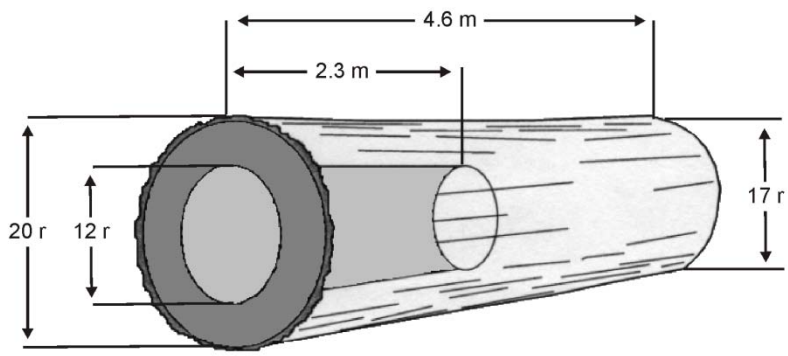

Figure 8.50 Assessing Grade in Log with Severe Heart Rot and Residual Length is Too Short to Cut Lumber.

The log above has severe heart rot that is estimated to travel for half the length of the log. The 4 rad collar is too thin to cut lumber, and a normal grade reduction is made to include the rotten heartwood and the sound collar. That is, the gross volume attributable to the rotten end is a 100 percent grade reduction for 2.3 m. The other half of the log is sound but is shorter than the 2.5 m required for manufacture, so it must also be included as 100 percent grade reduction for 2.3 m. As a result, the entire log is 100 percent grade reduction.

Although the following calculations are unnecessary in field practice, they are shown to illustrate the principle of a cumulative grade reduction.

The first grade reduction is the heart rot for one-half the length of the log:

Gross volume	=	17 r/20 r/4.6 m	=	(209 + 289)	=	498 dm^3
Grade reduction	=	12 r/12 r/2.3 m	=	(52 + 52)	=	104 dm^3

The second grade reduction is the collar which is too thin to produce lumber:

Grade reduction	=	UV 20 r - UV 12 r x 2.3 m	=	126 - 45) x 2.3
	=	81 x 2.3	=	186 dm^3

The third grade reduction is the sound half of the log that is too short to produce lumber:

Grade reduction	=	UV 17 r x 2.3 m	=	91 x 2.3)	=	209 dm^3

The three grade reductions are totalled and the percentage of the log available for manufacture is calculated:

Total Grade reduction	=	104 + 186 + 209	=	499 dm^3

(Rounding conventions and log taper result in a total grade reduction of 1 dm3 more than the gross volume of the log, and because the grade reduction cannot exceed the gross volume, it is made equal to the gross volume).

$$\text{\% of log which can be manufactured} = \frac{498-498}{498} \times 100 = 0 \text{ percent}$$

In field practice, significantly different results can be expected from cumulative grade reductions among scalers, depending on method. Although in most cases, the actual grade of a log will not be affected, the assessment of borderline logs can become a concern, particularly in performance checks. The fault does not lie with the scaler, but in the suitability of the available methods to the size and shape of a particular log. Because grading is quite subjective, just as the determination of firmwood loss is, more emphasis should be placed on the actual grade classification by the scaler and the reasoning behind the grade call, rather than technicalities.

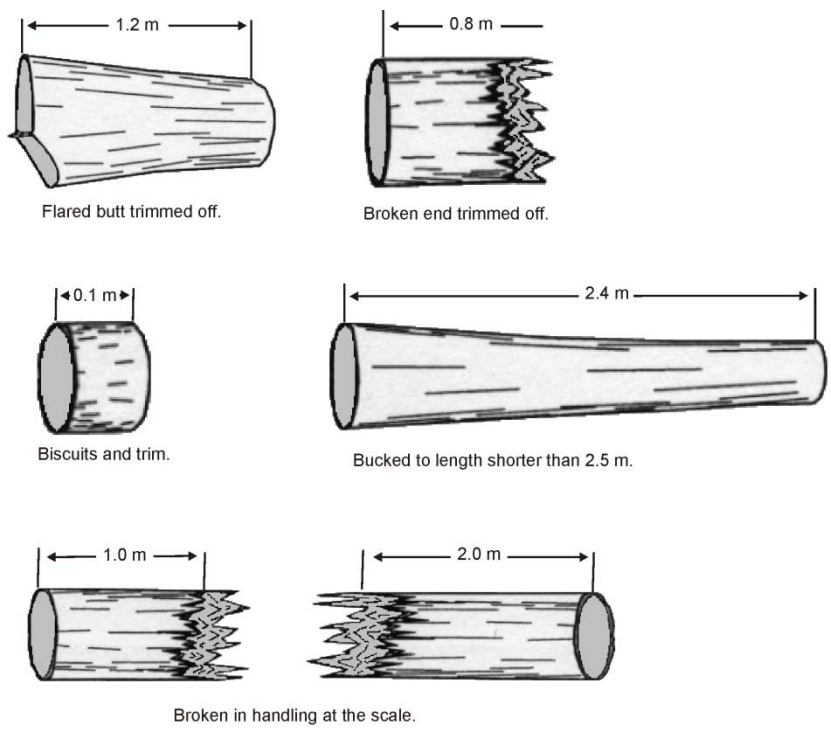

Figure 8.51 Examples of Short Logs Left After Bucking at the Scale Site and Deemed to be 2.5 m Long (Interior) and 5.2 m Long (Coast).

The examples on the previous page illustrate a number of instances of short logs left after handling and bucking at the scale site prior to scaling. For grading purposes, these logs are all deemed to be 2.5 m long in the interior and 5.2 m long on the coast, even though the recorded measurements are as shown in the examples. That is, they may not be down-graded because they are shorter than the minimum requirements.

Where unscaled timber is bucked and delivered to a scale site or bucked at the scale site for the purpose of manufacturing special forest products prior to scaling, the timber is to be scaled and graded as logs. The classification and scaling of special forest products are described in the chapter of the same name in this manual. Figure 8.52 below provides examples of different logs which were bucked to specific lengths to suit the specifications of the product, but do not have special forest product status. Therefore, just as with other logs and chunks shorter than 2.5 m long for grading purposes, they are deemed to be 2.5 m long in the interior and 5.2 m long on the coast.

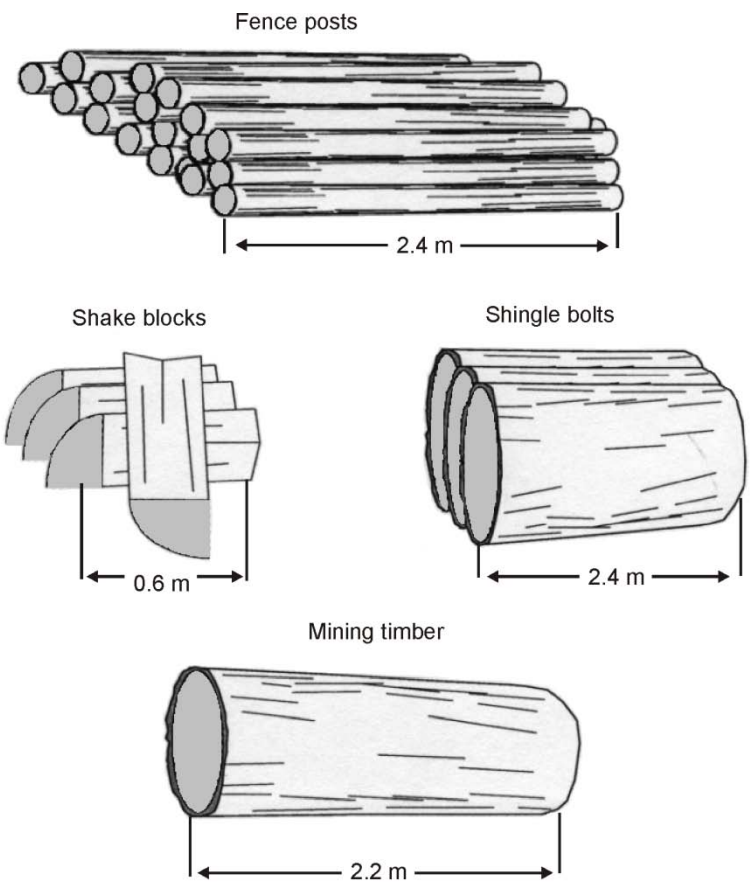

Figure 8.52 Example of Logs Cut to Special Forest Product Lengths but Not Classified as Such and Deemed to be 2.5 m Long (Interior) and 5.2 m Long (Coast).

8.6.9 Assessing Grade in Logs with Crook, Pistol Grip and Sweep

8.6.9.1 Crook

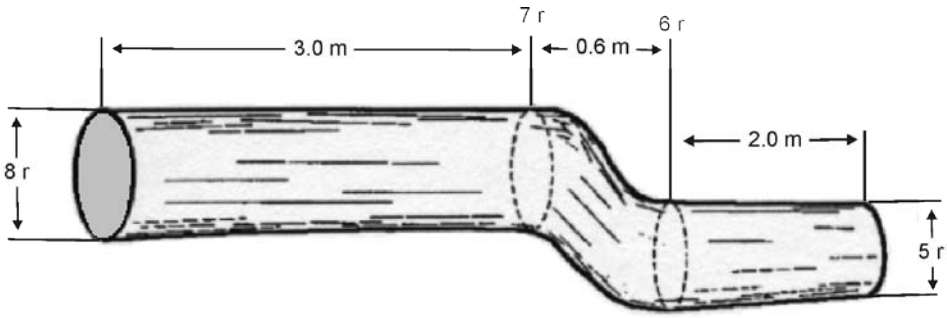

Figure 8.53 Visually Bucking a Log with Crook to Assess Lumber Recovery.

The first log in this section is a log with severe crook near the top end of the log. The crook is grade reduction because that portion is not straight enough to recover lumber. The portion above the crook is also grade reduction because it is too short to cut lumber, so the log is 100 percent grade reduction for 2.6 m.

8.6.9.2 Pistol Grip

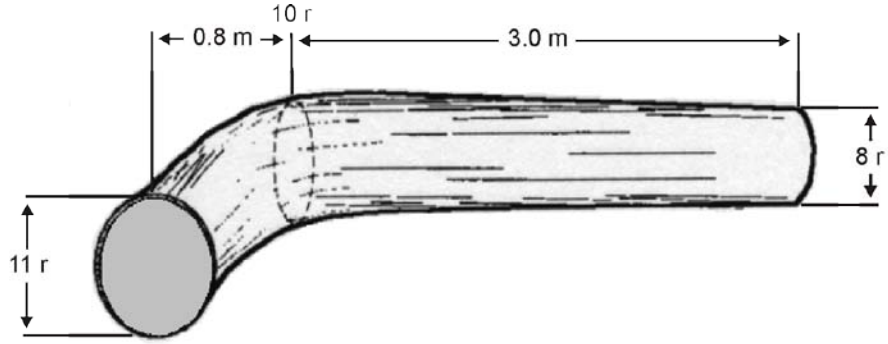

Figure 8.54 Visually Bucking a Log with Pistol Grip to Assess Lumber Recovery.

The pistol grip in this example affects 0.8 m of the butt end of the log and because this section is too short to manufacture lumber, it is a 100 percent grade reduction for 0.8 m.

8.6.9.3 Sweep

For logs affected by sweep, the scaler should assess the percentage that is available to cut 2.5 m of lumber that is straight enough. An example of straight enough lumber is based on the NLGA (National Lumber Grading Authority) requirements that would allow a minimum warp.

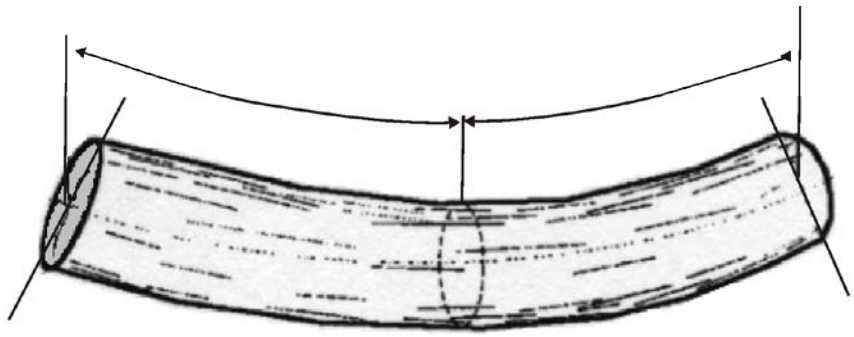

Figure 8.55 Visually Bucking a Log with Sweep to Assess Lumber Recovery.

The log shown here has severe sweep that is uniform throughout the length of the log. If this log was bucked at its mid-point, the sweep would be reduced and it would produce two logs of adequate length. The log would be suitable to produce a portion straight enough to cut lumber and milling losses would be minimized.

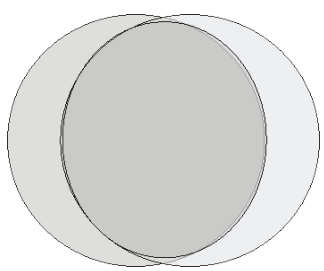

Figure 8.56 An Ellipse Shape is Created When Sweep Misaligns the Two Ends of a Log.

When considered from the end, the area available to cut lumber from a log shows as an elliptical shape. The darker shade shows what portion is available to cut lumber.

This ellipse can be calculated using the following formula:

Width (cm) x Height (cm) x (π/4)

8.6.9.3.1 Measuring the Sweep

The following is the procedure to measure the offset:

Lay a tape straight on the log from the top centre to the butt centre of the log.

Find the geometric centre of the affected section.

Measure the distance between the tape and the geometric centre of the affected segment.

This procedure can be repeated vertically or horizontally for logs affected by more than one sweep. The example below shows a loggers tape being positioned at the geometric centre point of each log end. The geometric centre of the log at midpoint is then determined. Measure from that geometric centre to the tape edge with a scale stick to establish the offset in rads.

8.6.9.3.2 Simplified Method

The following calculation methods will provide you with accurate percentages, however they may be somewhat onerous in a field situation. In recognition of the difficulty with multiple calculations, simplified methods have been provided.

A comparable method is:

Midpoint – Offset/Midpoint (or top measurement if ≤ 2.5m) x 100 = % available to cut.

Midpoint diameter (or **top** on logs or segments 2.5 m in length) – offset = width and height.

Using the example shown in Figure 8.5.7 this becomes:

20 – 5 = 15 width and height

Using these numbers, the simplified formula becomes:

$$\frac{15}{20} \times 100 = 75\ \%$$

This example shows a 2.5 metre log with an 18 rad top and 19 rad butt. The measured offset is 4 rads.

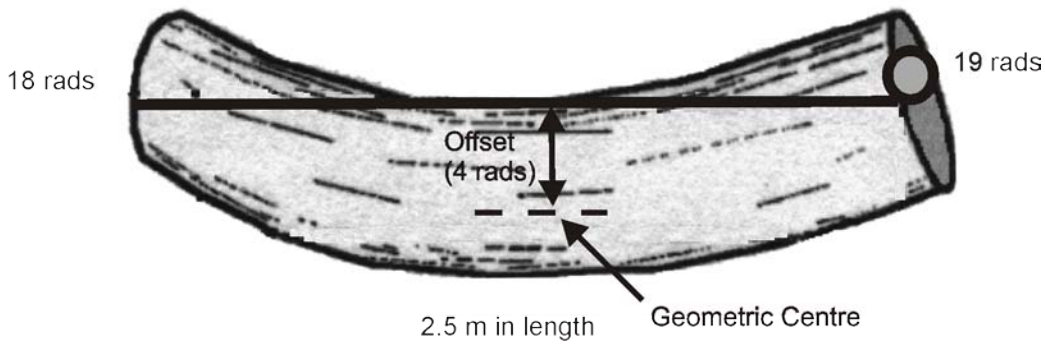

Figure 8.57 Measuring the Offset for 2.5 m Log.

8.6.9.3.3 Section/Segment Less Than 2.5 Metres

For this calculation the width is equal to the height minus the offset. The height is equal to the small end in rads. This formula is then divided by the area of the small end times the length of the log in decimetres. Multiply that product by 100 to convert to the percentage available to cut lumber.

* All value have been converted to decimetres or square decimetres.

$$\frac{\text{Width (dm) x Height (dm) x } (\pi/4) \text{ x length (dm)}}{\text{Small End Area (dm}^2\text{) x length (dm)}} \text{ x } 100 = \text{\% available}$$

Small End (rads) - Offset (rads) = Width (rads)

For example in Figure 8.5.6:

18 rads - 4 rads offset = 14 rads (28 **cm**) = 2.8 **dm** Width

18 rads (36 **cm**) = 3.6 **dm** Height

Area of small end = 18 x 18 x 3.141592 (π) = 1018 cm2 = 10.2 dm^2

2.5 **m** = 25 **dm**

Using these values the formula becomes:

$$\frac{2.8 \text{ x } 3.6 \text{ x } (.7854) \text{ x } 25}{10.2 \text{ x } 25} \text{ x } 100 = 77.6\ \%$$

8.6.9.3.4 Logs 2.5 Metres to 4.9 Metres

There is a difference in the formula for sweep on logs between 2.5 m. and 4.9 m. The midpoint area is used for this length rather than the small end. The formula becomes:

$$\frac{\text{Width (dm) x Height (dm) x } (\pi/4) \text{ x length (dm)}}{\text{Midpoint Area (dm}^2\text{) x length (dm)}} \text{ x } 100 = \%\text{ available}$$

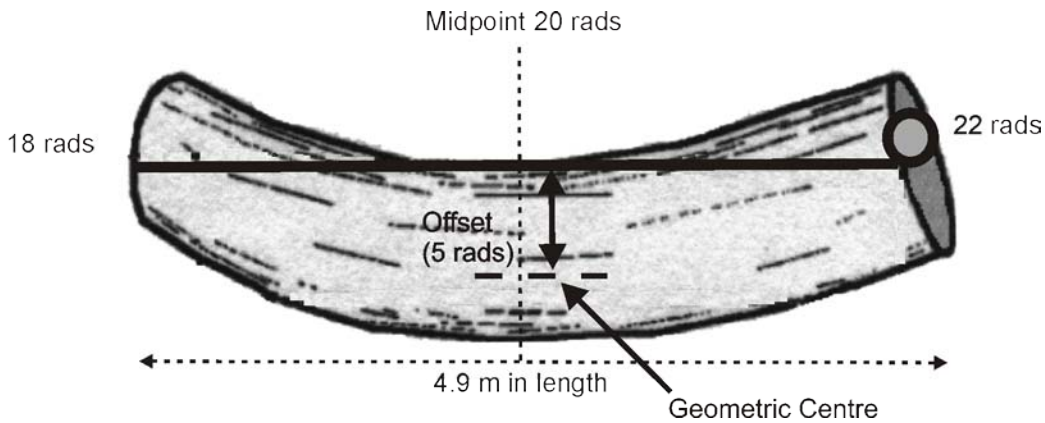

Figure 8.58 Measuring the Offset of Logs 2.5 m to 4.9 m.

20 rads - 5 rads offset = 15 rads (30 cm) = 3.0 dm **Width**

20 rads (40 cm) =4.0 dm **Height**

Area of midpoint = 20 x 20 x 3.141592 (π) = 1256 cm2 = 12.5 dm^2

4.9 m = 49 dm **length**

Using the values in this example the formula becomes:

$$\frac{3.0 \text{ x } 4.0 \text{ x } .7854 \text{ x } 49}{12.5 \text{ x } 49} \text{ x } 100 = 75.4\ \%$$

8.6.9.3.5 Sweep Calculation Summary:

- For 2.5 m section, small end – offset = width
- For 2.5 m to 4.9 m log, mid point - offset = width
- Volume of ellipse/ gross volume x 100

This page is intentionally left blank.