Farm Structures
FACTSHEET

Ministry of Agriculture

Order No. 383.000-1
Revised September 2015

MANURE STORAGE STRUCTURES

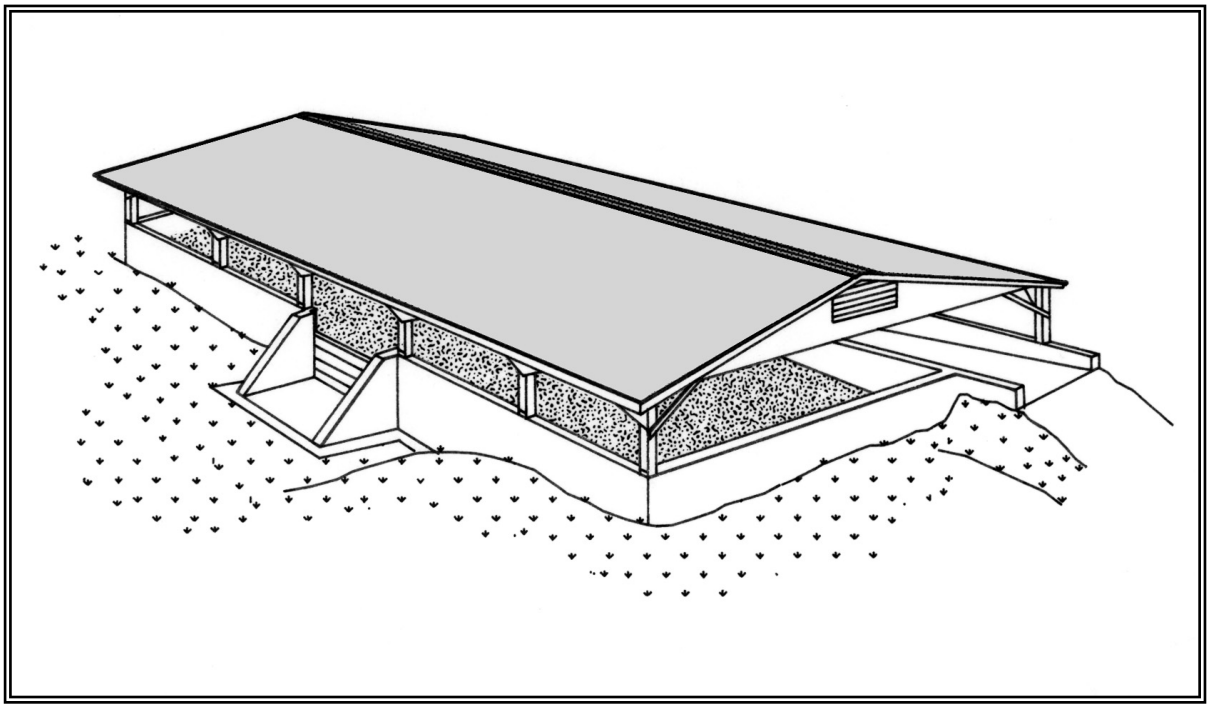

MANURE STORAGE STRUCTURES

A well-planned manure storage system is an asset to any livestock operation. Livestock manure is a valuable fertilizer for farm crops and its management is a key component of a sustainable agricultural enterprise. It should be stored in a structure that will retain nutrients for application during the crop growing season. A poor management system results in untimely applications of manure to land and the potential of causing pollution to the environment. This note explains some of the factors to be considered in a well-designed manure storage structure.

ENGINEERED STRUCTURAL PLANS

The B.C. Ministry of Agriculture's conceptual drawing service may be helpful in initial planning activities. Structural working drawings generally are not available from the BC Ministry of Agriculture and must, therefore, be designed by an engineering consultant. A list of consultants providing this service is available on the B.C. Ministry of Agriculture website in a document entitled *Engineering Consulting Services for Agricultural Buildings.*

A manure storage structure must be designed according to the requirements of the *National Farm Building Code of Canada.* Manure storage plans should provide all the information necessary to locate and construct the facility so that it is structurally sound and functionally efficient. A plan for a typical concrete tank would include information on:

- design criteria stipulated in Part 2 of the *BC Building Code* and the *National Building Code of Canada*, both of which reference the *National Farm Building Code of Canada.* Farm buildings are legally permitted to be designed to specifications different from residential, commercial and industrial structures because they are defined as low human occupancy buildings.

- location of the structure in relation to other buildings on the farm
- type and strength of concrete to be used
- thickness of concrete in the walls and floor
- size and location of reinforcing steel
- depth of tank below grade and any special footing requirements, and
- filling, agitation and emptying details

Good plans enable competitive bids to be obtained from building contractors. Contractors can therefore all quote on precisely the same structure with its prescribed details and specified materials.

Submission of engineered plans will make it possible for the owner to obtain a building permit before construction can begin for those municipalities requiring such drawings. Engineering involvement also ensures that appropriate sign-offs and inspections are carried out. Furthermore, clearly outlined design standards and details specified on a plan can form the basis of any contractual agreements between a contractor and the owner.

ESSENTIAL FEATURES OF A MANURE STORAGE

The essential steps in planning a new manure storage are determining its size, locating the storage in relation to other buildings, preparing a site plan and engineered drawings, and obtaining a building permit from the applicable local government authority.

Size of Storage

When sizing a manure storage structure, consider the following questions:

- How much manure is generated by all of the livestock on the farm and will livestock numbers increase in the near future?
- What is the minimum period of storage required for the geographic area in question? For most BC farms, six or seven months are recommended but capacity of this duration may not necessarily give the flexibility desired. Up to one year may be required, depending on the types of crops planted and the ability to fertilize them with manure. Sufficient duration of storage should be provided to avoid spreading manure on land when there is any danger of runoff.
- Where are runoff and wastewater draining toward? Additional collection points and storage for contaminated runoff from outside yards and wastewater from cleanup operations should be provided.
- Is all clean water from roofs and other yard areas diverted away from the manure collection area?
- Should the storage structure be covered? In high rainfall areas, it often makes good economic sense to roof manure storages to exclude precipitation, which can average as high as 1200 millimetres (about 48 inches) over a six-month period in some south coastal regions of the province. Inclusion of precipitation amounts significantly reduces the manure storage capacity of the structure. See also BC Ministry of Agriculture factsheet No. 383.100-2 entitled *Sizing Dairy Manure Storage Facilities.*

Location of Storage

A suitable location for any storage depends on a number of key factors to be considered as outlined below.

- Allow room for expansion and access for agitation and cleanout.
- Evaluate the impact of various mechanical handling options that affect how manure is to be collected within the barns, transferred to storage and eventually moved from storage to fields. See also BC Ministry of Agriculture factsheet No. 381.200-1 entitled *Daily Manure Scraping Management Systems for Dairy Barns.*
- Topographic and groundwater particulars may constrain building detail decisions. For example, high water tables will dictate the depth to which a storage can be built.
- The direction of prevailing winds may also affect a suitable location. Odours can be offensive around farmhouse yards and on neighbouring properties.
- The location of the storage should minimize odours that have the potential to create problems around milk rooms and other food storage areas.

The size and location of the manure storage should be shown on a site plan before permitting is granted and construction begins. See also BC Ministry of Agriculture factsheet No. 305.104-2 entitled *Siting and Management of Dairy Barns and Operations.*

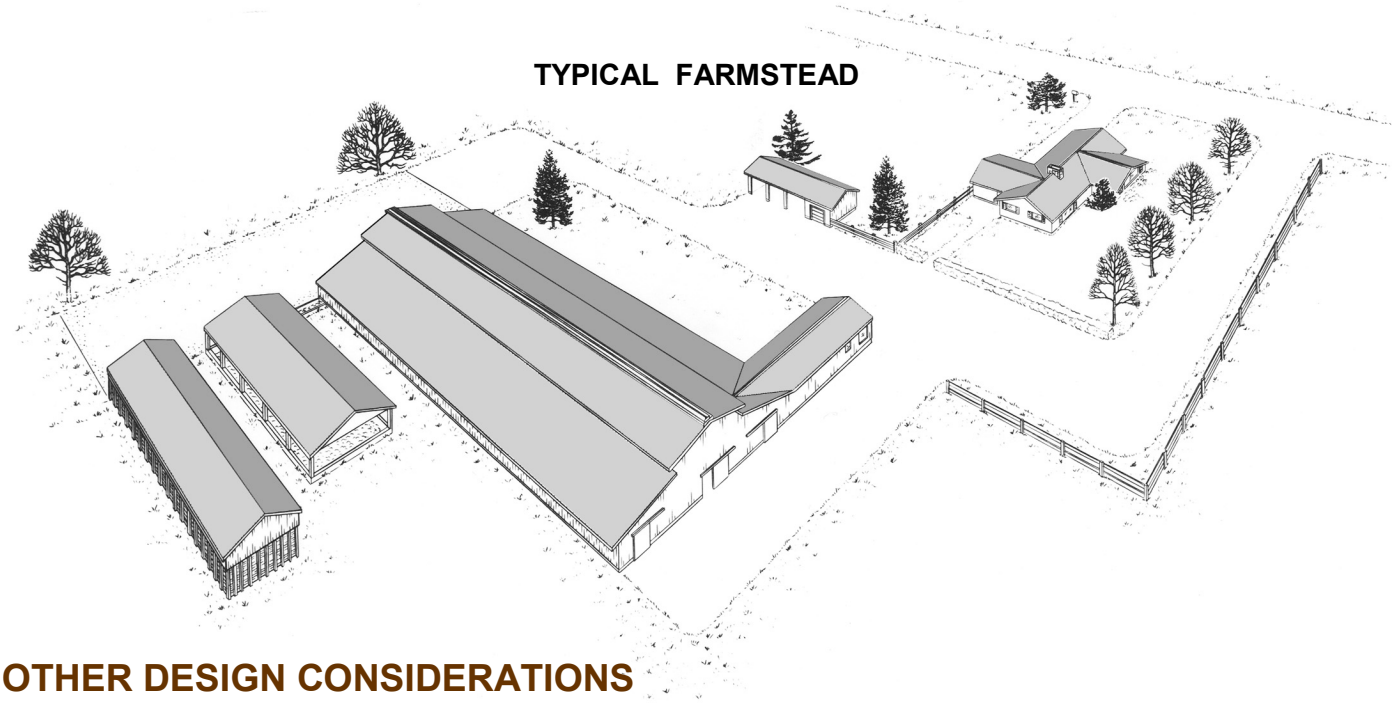

OTHER DESIGN CONSIDERATIONS

Safety

All manure storages must incorporate safety features to protect livestock, farm workers and children. Several key minimum requirements associated with protective fencing, for example, are outlined in Part 4 of the *National Farm Building Code of Canada*. The safety requirements of the Workers' Compensation Board of British Columbia should also be implemented in manure storage structures.

Outside tanks which incorporate a ramp or suspended slab over the tank for tractor scraping of manure require a heavy duty protective fence. It should not be possible for any tractor to accidentally fall into the tank or ride off the edge of the ramp. This protective fence should be constructed of 100-mm (4-inch) welded steel pipe set in concrete. For most tractors, the fence should be at least 900 mm (36 inches) in height. Chains should not be used instead of pipe because tractors are capable of climbing over chain safety rails.

Construction and Roof System Design

Roof systems are typically built above manure storage structures using two different construction methods. One uses manufactured engineered trusses supported on stud wall framing with knee braces connecting the wall and trusses for lateral stability. A second method incorporates trusses supported on beams which are supported by columns or posts. Cross braces between the posts and beams provide longitudinal stability and knee bracing from the posts to the trusses ensure lateral rigidity. The posts or stud walls are anchored to the concrete storage walls. It is recommended that 3/8-inch-thick sheathing-grade plywood, or equivalent, be installed under the roofing to prevent corrosion of roof metal by manure gases. A continuous ridge ventilation opening or equivalent is also recommended to allow gases to escape.

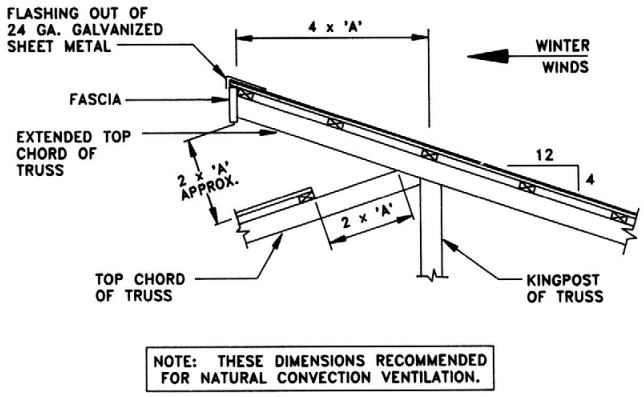

EXAMPLE OF OVERSHOT ROOF VENT

RIDGE VENT DIMENSIONS	
BUILDING WIDTH	'A' DIMENSION
20'–35'	3 1/2"
35'–45'	4"
45'–55'	5"
55'–65'	6"
65'–75'	7"
75'–85'	8"
85'–95'	9"
95'–105'	10"

Width of Storage

The width of the manure storage structure may be limited by one or more of the following constraints.

- The maximum available span of manufactured engineered roof trusses, which will be dependent on local snow and wind loads.
- The maximum reach of agitation equipment, particularly if access is limited to one side.
- The maximum width of channel legs if a circulatory agitation system is used. See also B.C. Ministry of factsheet No. 383.510-1 entitled *Circulatory Agitation Systems for Concrete Dairy Manure Storage Tanks.*

Length of Storage

The length of the manure storage may also be limited by available agitation access points for liquid or semisolid storages due to the slope of nearby land, proximity of other buildings, or other factors. Regardless of site conditions, a square design rather than a long rectangular structure is the most economical shape for the same volume of storage.

Depth of Storage

The storage tank must be designed to withstand manure, vehicle, soil and hydrostatic loads. Uplift forces caused by high water table buoyancy effects on submerged structures must be considered in an engineered design. To prevent upward movement and cracking of the concrete slab, the floor of the tank should generally not be located more than 600 millimetres (24 inches) below the highest expected groundwater table.

If the depth of the storage tank is limited by the highest expected water table, the storage capacity of the tank for a given width and length will also be affected. A 2400-mm (8 ft) depth is considered a practical design depth for most site conditions. Tanks that are very shallow result in a high unit cost of construction (dollars per cubic metre of storage); in contrast, tanks that are very deep are difficult to agitate. A compounding additional problem is that most vacuum tankers cannot pump out tanks that are deeper than 3000 mm (10 ft). As a rule of thumb, tanks should not be shallower than 1800 mm (6 ft) and not deeper than 3000 mm (10 ft).

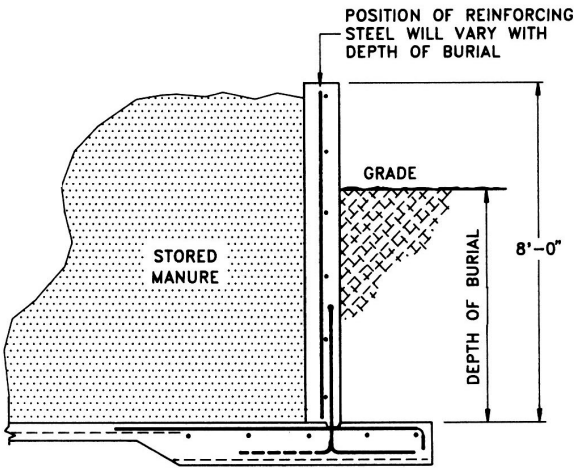

TYPICAL MANURE STORAGE SHOWING RETAINING WALL DESIGN

Tractor and Personal Access

Sediment buildup and surface crusting are potential problems for circulatory agitation system tanks. If possible, a tractor entrance should be provided to allow for complete cleanout of heavy sediments which may accumulate over a period of several years. At no time should a covered or poorly-ventilated open pit be entered unless the person so doing is equipped with a self-contained breathing apparatus or equivalent personal protective equipment. A second person should always be on watch when others are entering potentially hazardous areas.

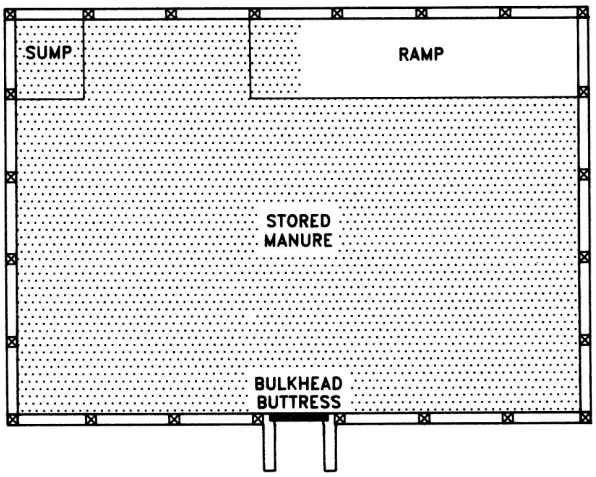

TYPICAL FLOOR PLAN

Manure Removal Options

Complete cleanout of the storage structure should be considered a part of good design. A buttressed bulkhead with removable planks is one construction option that could accommodate tractor access. Complete emptying can also be achieved by incorporating a low-slope unloading ramp along the storage wall. If a pump is used, then a sump large enough to store one vacuum tanker load of manure should be provided at one or more corners of the storage. The sump will allow the pump suction hose or pipe to be completely submerged when the storage is nearly empty. The sump floor should be at least 12 inches below the storage floor and the storage floor should slope towards the sump.

Construction Modifications for Different Filling Methods

The design of a manure storage structure may also be influenced by the method used to transfer manure from the livestock barn to storage. Some filling methods are outlined below.

1. Gutter cleaners are suitable for manure that is more semisolid in consistency. See an equipment supplier for specifications.
2. Gravity flow slurry channels. See B.C. Ministry of Agriculture factsheet No. 383.350-1 entitled *Gravity Flow Slurry Channels for Dairy Manure.*
3. Alley scrapers. See an equipment supplier for specifications.
4. Flush flumes. See an equipment supplier for specifications.
5. Tractor scraping onto a ramp over the manure storage. A structural engineer must design the ramp or bridge.
6. Manure conveyancing equipment such as augers, paddle conveyors, air pumps, piston pumps, and centrifugal chopper pumps. See an equipment supplier for specifications. See also B.C. Ministry of Agriculture factsheet No. 381.200-1 entitled *Daily Manure Scraping Management Systems for Dairy Farms* which further describes pump systems and manure transfer methods.
7. Pull/plug systems for liquid manure in swine barns.

The following publications have been referred to in this factsheet. They are available on the internet.

301.000-1 Engineering Consulting Services for Agricultural Buildings

305.104-2 Siting and Management of Dairy Barns and Operations

381.200-1 Daily Manure Scraping Management Systems for Dairy Barns

383.100-2 Sizing Dairy Manure Storage Facilities

383.350-1 Gravity Flow Slurry Channels for Dairy Manure

383.510-1 Circulatory Agitation Systems for Concrete Dairy Manure Storage Tanks

FOR FURTHER INFORMATION CONTACT
Phone: 604.556.3001
Toll Free: 1.888.221.7141

MINISTRY OF AGRICULTURE
1767 Angus Campbell Road
Abbotsford, B.C. V3G 2M3