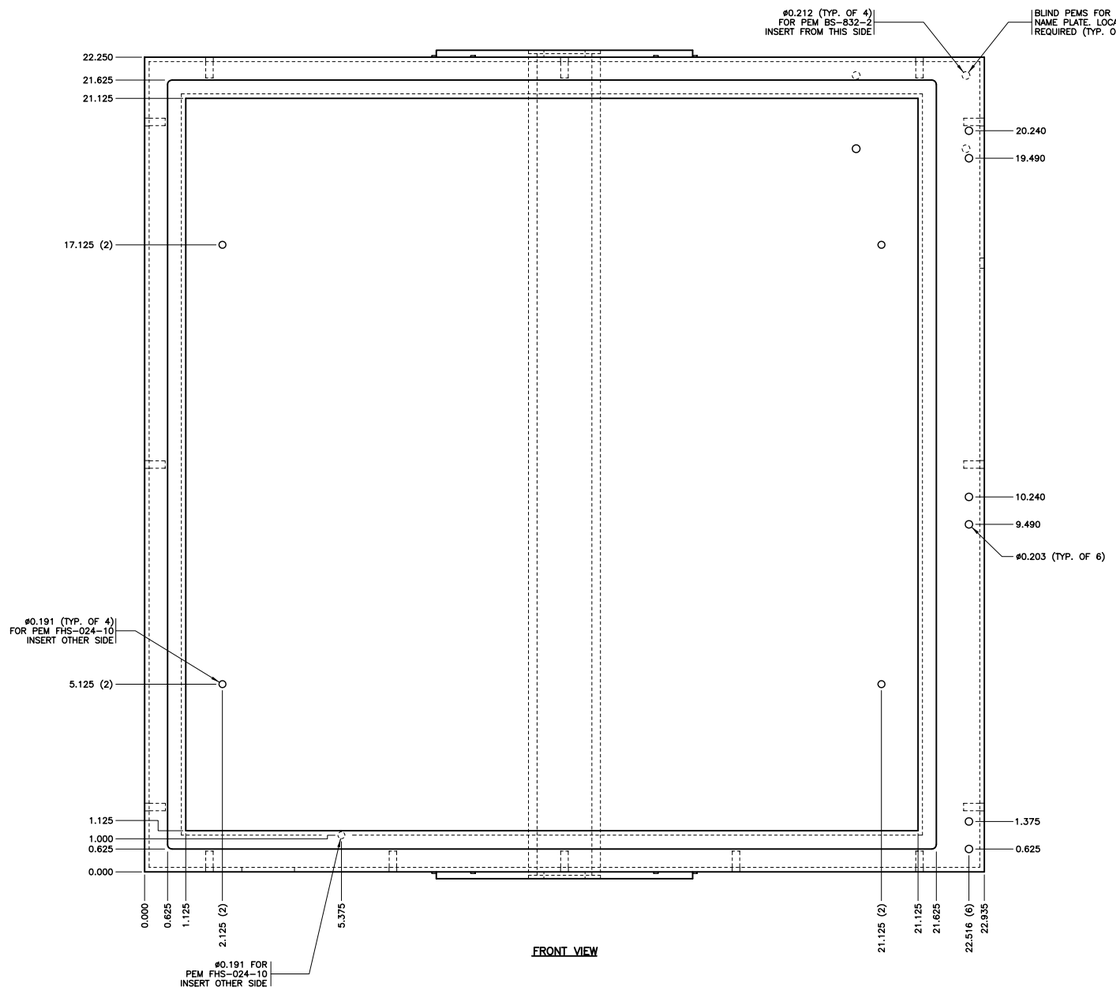

FRONT VIEW

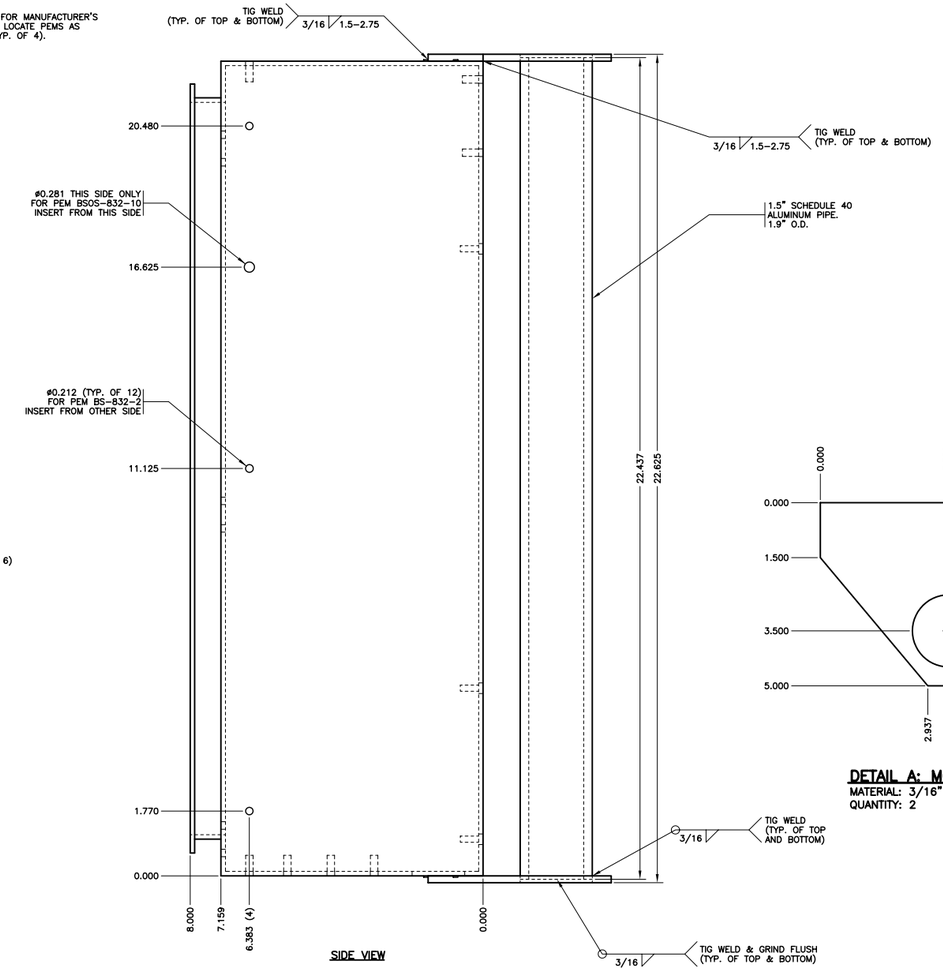

SIDE VIEW

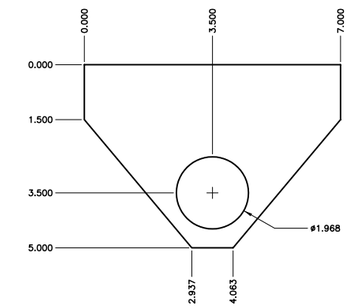

DETAIL A: MOUNTING PLATE
MATERIAL: 3/16" ALUMINUM
QUANTITY: 2

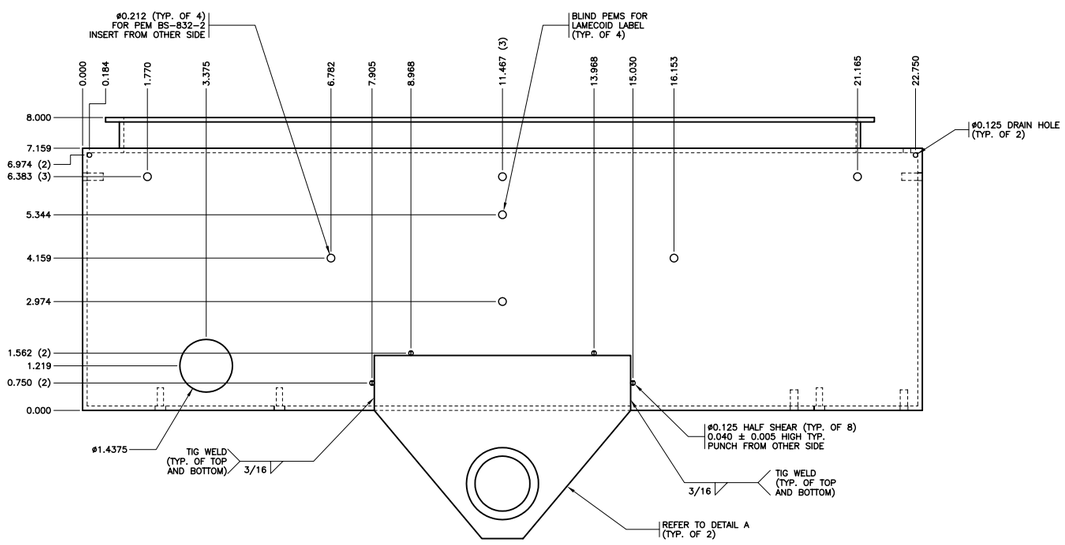

BOTTOM VIEW

PART M01: ENCLOSURE
MATERIAL: 1/8" ALUMINUM
FINISH: POWDER COAT CARDINAL C241-BK01

NOTES:
1. ALL EXTERIOR SEAMS SHALL BE TIG WELDED AND GROUND SMOOTH. CORNER WELDS SHALL BE GROUND TO MINIMUM 1/8" RADIUS.
2. ALL DIMENSIONS ARE IN INCHES UNLESS NOTED.
3. TOLERANCES ARE AS FOLLOWS:
   FORMING: ±0.015
   HOLE LOCATIONS: ±0.010
   HOLE DIAMETERS: ±0.008
   ANGLES: ±1.0°

ALL DIMENSIONS ARE IN INCHES UNLESS OTHERWISE SHOWN

0" 2"

No.	Description	Date
J		
I		
H		
G		
F		
E		
D		
C		
B		
A	GENERAL REVISIONS	MAY03

REVISION

LED LANE CONTROL SIGNAL

ENCLOSURE

BRITISH COLUMBIA
Ministry of Transportation and Highways

Drawing No. MS700.2 A

File: P:\ACTIVEPROJECTS\03003_2003 MATERIAL STANDARDS WORKS\DRAWINGS_DESIGN DRAWINGS\CHAPTER700_FIBRE_OPTIC_LANE_CONTROL_SIGNS\MS700.2.DWG Last edited: JUN. 02, 03 @ 11:58 a.m. by rtaylor