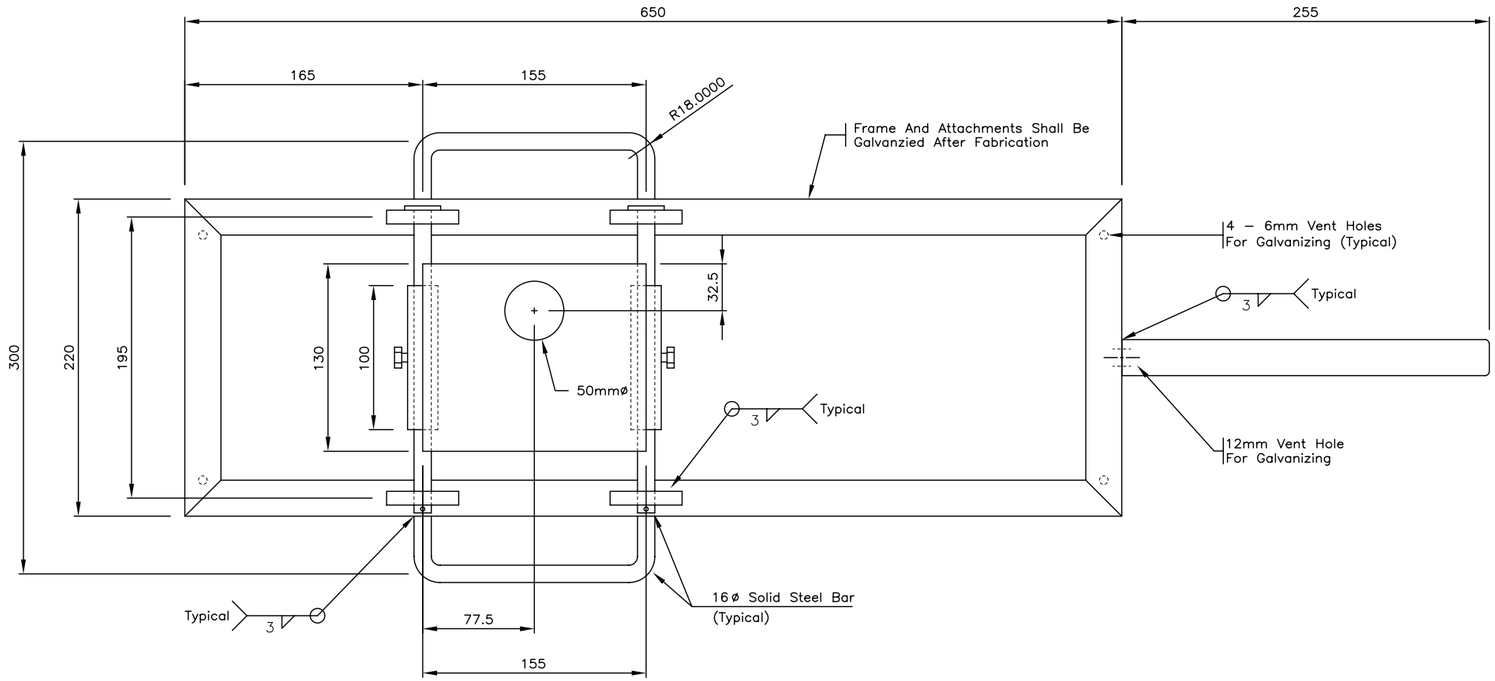

PLAN VIEW

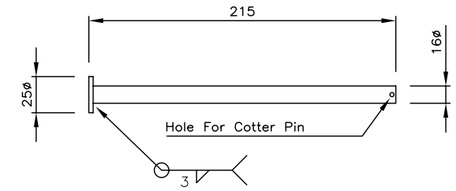

RAIL PIN DETAIL

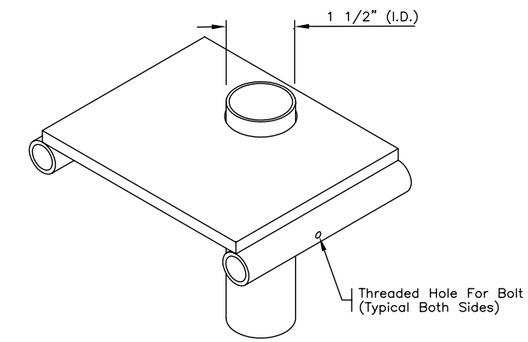

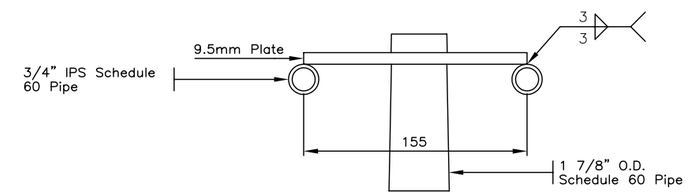

DRIVE UNIT SUPPORT BRACKET DETAILS

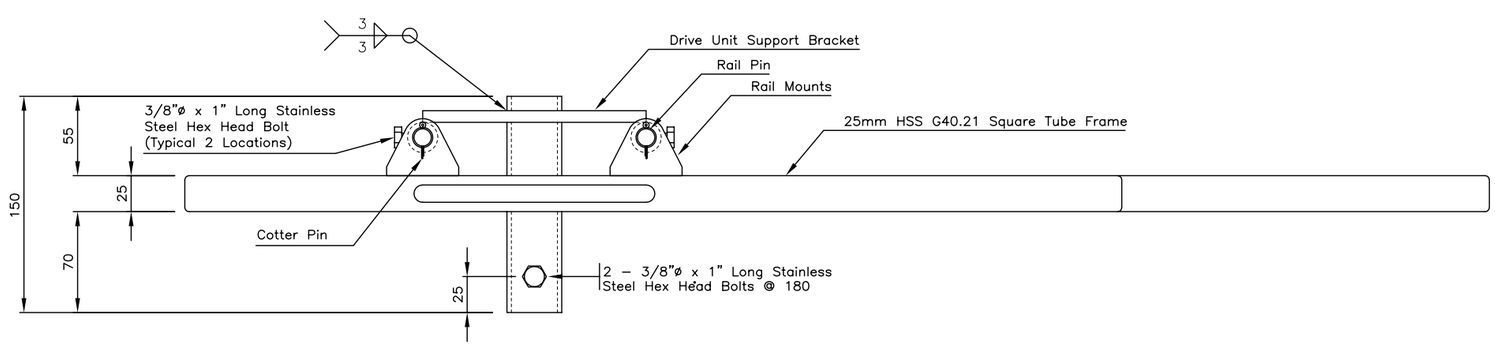

SIDE VIEW

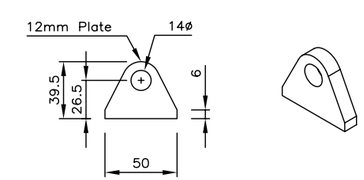

RAIL MOUNT DETAILS

Notes:

1) Refer to Ministry Material Standard For Winch Specifications Chapters MS309.

2) All Connectors, Nuts, Bolts And Washers To Be Attached To Their Parent Member.

3) All Dimensions Are In Millimetres Unless Otherwise Noted.

4) Highmast External Drive Unit Support Frame Supplied With Drive Unit.

NOT TO SCALE

No.	Description	Date
J		
I		
H		
G		
F		
E		
D		
C		
B		
A		

REVISION

HIGHMAST EXTERNAL DRIVE UNIT SUPPORT FRAME

DETAILS

BRITISH COLUMBIA

Ministry of Transportation and Highways

Drawing No. **MS370.4**