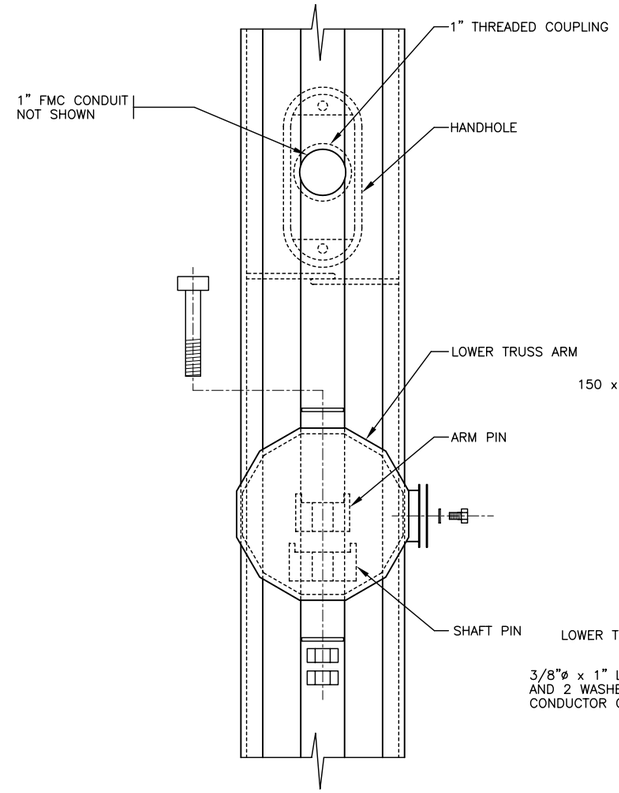

FRONT VIEW

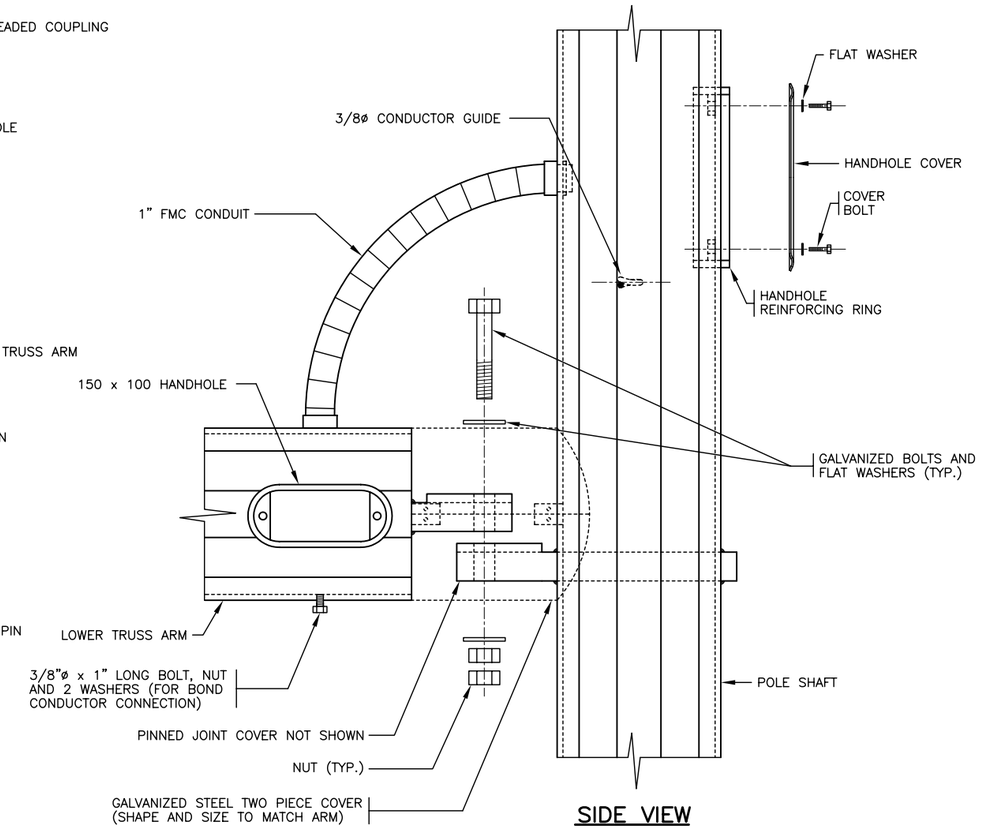

SIDE VIEW

PIN JOINT
(FOR TRUSS SIGN BRIDGE STRUCTURES)

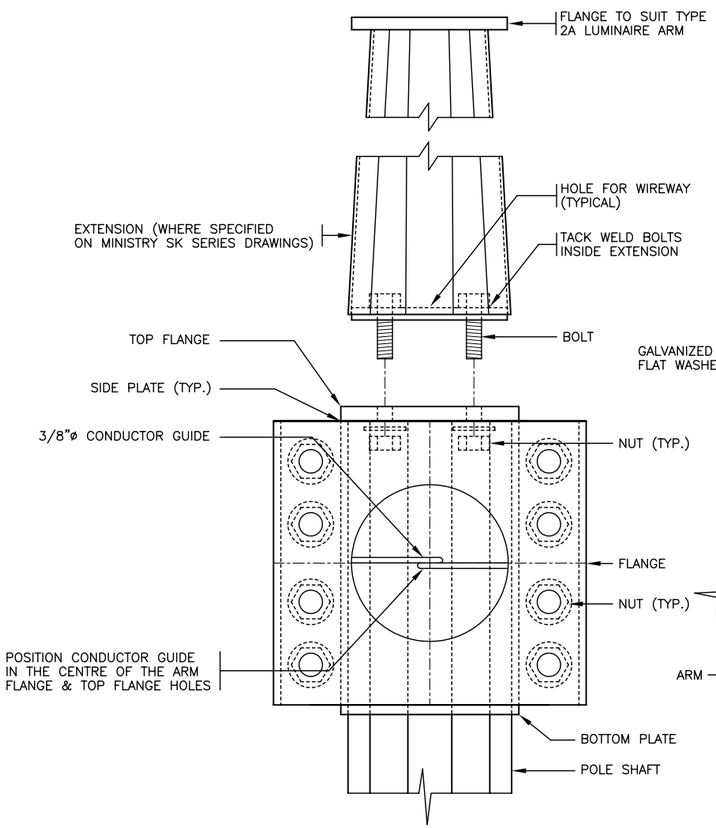

FRONT VIEW

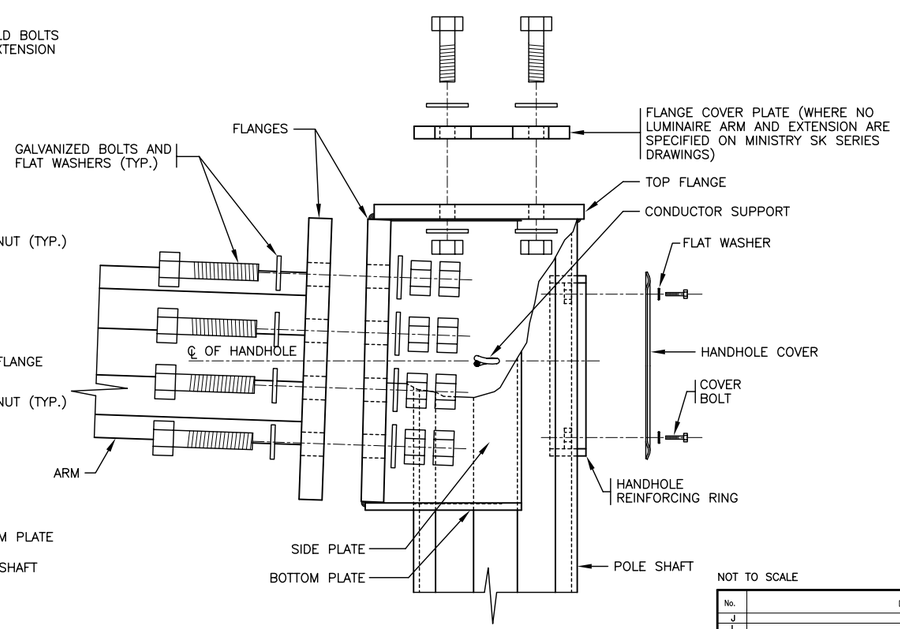

SIDE VIEW

FIXED FLANGE JOINT
(FOR CANTILEVER OR SIGN BRIDGE STRUCTURES)

NOTES

1. SEE MATERIAL STANDARD SPECIFICATIONS CHAPTER 306 – CANTILEVER, SIGN BRIDGE STRUCTURES FOR ADDITIONAL INFORMATION.
2. ALL DIMENSIONS ARE IN MILLIMETRES UNLESS OTHERWISE NOTED.

NOT TO SCALE

No.	Description	Date
J		
I		
H		
G		
F		
E		
D		
C		
B		
A		

REVISION

GENERIC CANTILEVER AND SIGN BRIDGE STRUCTURES

FLANGE AND PIN JOINTS

BRITISH COLUMBIA Ministry of Transportation and Highways

Drawing No. MS350.6