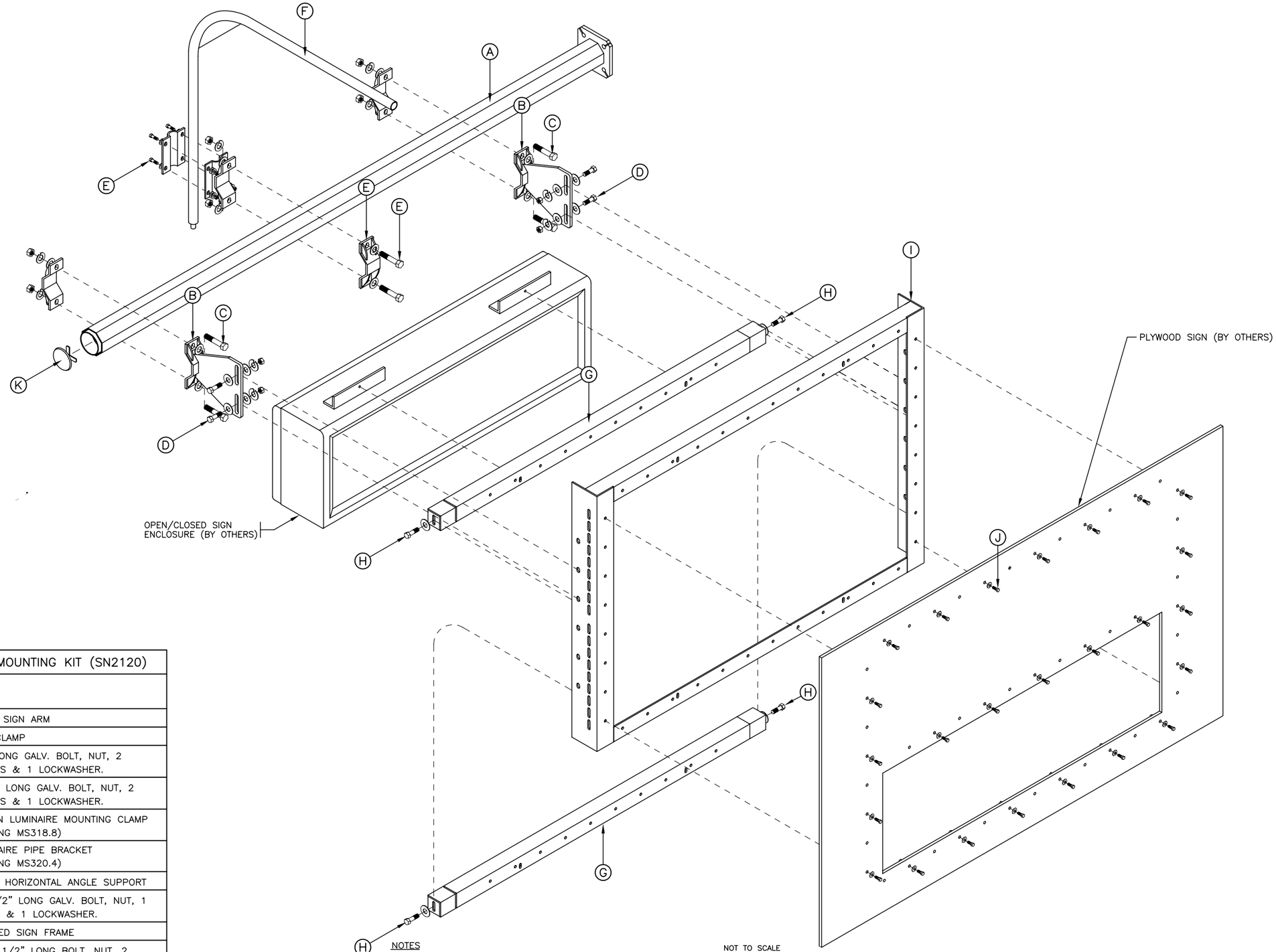

OPEN/CLOSED SIGN MOUNTING KIT (SN2120)		
ITEM	QUANTITY	DESCRIPTION
A	1	2500 LONG SIGN ARM
B	2	SIGN ARM CLAMP
C	6	5/8"ø 4" LONG GALV. BOLT, NUT, 2 FLATWASHERS & 1 LOCKWASHER.
D	4	5/8"ø X 2" LONG GALV. BOLT, NUT, 2 FLATWASHERS & 1 LOCKWASHER.
E	1	TYPE L SIGN LUMINAIRE MOUNTING CLAMP (SEE DRAWING MS318.8)
F	1	SIGN LUMINAIRE PIPE BRACKET (SEE DRAWING MS320.4)
G	2	ADJUSTABLE HORIZONTAL ANGLE SUPPORT
H	4	1/2"ø 1 1/2" LONG GALV. BOLT, NUT, 1 FLATWASHER & 1 LOCKWASHER.
I	1	OPEN/CLOSED SIGN FRAME
J	29	3/8"ø X 1 1/2" LONG BOLT, NUT, 2 FLAT WASHERS, 1 LOCK WASHER & 1 NYLON WASHER.
K	1	PLASTIC END CAP

NOTES

1. SEE MATERIAL STANDARD SPECIFICATIONS CHAPTER 301 – TRAFFIC SIGNAL, LUMINAIRE, AND SIGN POLE STRUCTURES FOR ADDITIONAL INFORMATION.
2. ALL DIMENSIONS ARE IN MILLIMETRES UNLESS OTHERWISE NOTED.
3. 'SN' DENOTES MINISTRY STOCK NUMBER.
4. ITEMS G AND I SHALL BE SUPPLIED PRE–ASSEMBLED.
5. ITEMS B AND E SHALL BE SUPPLIED PRE–ASSEMBLED TO 2.5m ARM.

NOT TO SCALE

No.	Description	Date
J		
I		
H		
G		
F		
E		
D		
C		
B	SIGN LUMINAIRE PIPE BRACKET MODIFIED	NOV96
A	GENERAL REVISIONS	AUG96

REVISION

OPEN/CLOSED SIGN MOUNTING KIT

ASSEMBLY DETAILS

BRITISH COLUMBIA

Ministry of Transportation and Highways

Drawing No. **MS320.1** **B**