Livestock Watering
FACTSHEET

BRITISH COLUMBIA
Ministry of Agriculture and Lands

Order No. 590.306-3
January 2006

RANGELAND LIVESTOCK WATER TROUGH

Design - Installation - Maintenance

This Factsheet discusses the steel water trough used on Crown land or private range sites in non-frost conditions. The drawings and design points given are sufficient to fabricate the trough. Installation and maintenance information is discussed.

Water Trough Requirements

The trough is designed to be used on Crown land range sites for spring-summer-fall grazing (the trough is not designed for winter use). Refer to picture of an installed trough in Figure 1, page 4. The trough will:

- water at least 6 cows at one time
- require no additional post & rail structure for stabilization
- have the piping and float valve protected from vandalism
- be simple to fabricate, install, winterize and maintain

General Description

The trough has the following characteristics:

- is made of welded 3/16 inch mild steel plate
- has flat ends and sloped sides
- is approximately 8 feet long, 2 feet high and 4 feet wide at the top tapering to 3 feet wide at the base
- has a removable (bolt-on) lid to protect the plumbing and float valve
- has a capacity of approximately 300 US gallons (with a 2 inch freeboard)
- weights approximately 700 pounds

The trough has two unique features:

- the inlet and outlet piping enters from underneath the trough so none is exposed to potential damage from livestock or vandals
- bolt-on extensions to the two end plates extend into the ground to stabilize the trough

Because wildlife use of developed water sites on Crown land is an important factor on these projects, the lid on the piping end includes a “critter escape”. The lid extends down into the water trough for pipe protection reasons and a piece of expanded metal is welded onto this lid face to provide traction for small mammals, etc. that may try to use the water or that may be trying to escape the water having fallen in.

Trough Design

The following drawings are sufficient to fabricate the trough. Note some of the details (the number of the note may be referred to in the drawings):

steel plate
(refer to Figures 2, 3)

1. The center section comprises the two sides and bottom bent from one piece of plate steel.
2. The top of each side is bent to form a one-inch wide reinforcement lip.
3. The ends are welded onto the center section.
4. The end plate extensions are bent with a four inch wide 'foot' and bolt onto the end plates with four, 3/8 inch black steel bolts, 1 inch long.

lid
(refer to Figure 4)

5. The lid is a separate piece connected onto the side lips with four, 3/8 inch stainless bolts, 1 inch long.
6. To prevent uplift of the lid, it fits under the two short pieces of angle iron welded onto the inside of each side.
7. Expended metal is welded to the sloped face of the lid to act as a 'critter escape'.

lifting
(refer to Figure 2)

8. Chain 'grabs' for lifting will be provided at each end plate by either:
   - minimum two, 1 ¼ inch holes cut at each lower outside corner (four holes in total), or
   - minimum two 'lift eyes' welded to opposite top corners of the side plates (two eyes in total) made of bent 1/2 inch round steel or rebar

inside plumbing
(refer to Figure 5)

9. The inlet plumbing coupler (1 inch steel, not cast iron) is welded into the trough bottom so the coupler is centered through the plate (i.e., the coupler is half in/half out of the trough) and so as the standpipe is plumb.
10. The outlet coupler (1 ¼ inch steel, not cast iron) is similarly welded to the bottom (centered and so the standpipe is plumb).
11. The trough drain coupler (1 inch steel, not cast iron) is welded to the plumbing end plate so as to be centered through the end plate.
12. The trough drain plug is either stainless or galvanized steel to avoid rusting.
13. The water level is controlled by a float valve so as to maintain a minimum of 2 inches of freeboard and is on a stand pipe that is;
    - 1 inch by 18 3/8 inches long
    - with a 1 inch 90 degree elbow, bushed as required for the float valve (i.e., a ¾ inch inlet, *Ritchie Co.* red plastic valve, or similar)
14. The outlet piping consists of a 180 degree turn and extension down below the water level to avoid plugging from surface floating debris;
    - if it is a float controlled trough, the outlet stand pipe is 1 ¼ inch by 18 3/8 inch long and acts as overflow protection
    - if the trough is set to have continuous flow-through (either to another trough or to 'waste'), the stand pipe length is **shorter** at 17 inch long so the freeboard can be maintained
15. A ¼ inch air release hole must be drilled at a high point in one of the elbows in this outlet piping to prevent air locking.

underneath plumbing
(refer to Figure 5)

16. The inlet and outlet piping underneath the trough is part of the site installation.

paint

17. The completed trough is to be painted with rust protection paint.

Materials List

The following list covers all the materials required to fabricate one trough, including the inside plumbing and float valve.

Welded Steel center section
(1 per trough)

3/16 inch steel plate
- 96 inches long by 81 ½ inches wide
- bent to shape to form bottom, sides and side lips
- four 3/8 inch holes drilled in lips for lid
- two holes cut in bottom for inlet and outlet couplings to be welded in

end plates
(2 per trough)

3/16 inch steel plate
- 48 inches wide by 23 inches high
- each plate cut for two lift holes or one welded lift hook of formed ½ inch round steel or rebar
- each plate drilled for two 3/8 inch bolt holes to attach the end plate extensions
- plumbing end plate cut for drain coupling to be welded in

end plate extension
(2 per trough)

3/16 inch steel plate
- 48 inches wide by 19 inches high
- bent to 90 degrees for 4 inch wide 'foot'
- each plate drilled for two 3/8 inch bolt holes to attach to end plate

lid
(1 per trough)

3/16 inch steel plate
- 48 inches wide by 30 inches long
- cut and bent to shape
- four 3/8 inch holes drilled for attachment to trough

"critter escape"
(1 per trough)

No. 9 expanded metal
- 3 feet wide by 16 inches long
- welded onto lid sloping face (do not cut lid)

lid retainers
(2 per trough)

1/8 inch angle iron
- 1 inch by 1 inch by 3 inches long
- welded to each inside trough side to retain lid

Welded Fittings
(1 each per trough)

Inlet - 1 inch steel coupling (not cast iron) welded perpendicular into bottom.
Outlet - 1 ¼ inch steel coupling (not cast iron) welded perpendicular into bottom
Drain - 1 inch steel coupling (not cast iron) welded into plumbing end plate

Bolts/Nuts
(1 set each per trough)

Lid - 4 bolts, 3/8 inch by 1 inch long, with nuts, stainless steel
Ends - 4 bolts, 3/8 inch by 1 inch long. with nuts, black steel

Pipe Fittings
(1 each per trough)

Inlet - 1 inch galvanized pipe
- 18 3/8 inch nipple, 90 degree elbow, 1 inch by ¾ inch bushing (or to suit float valve inlet size)

Outlet - 1 ¼ inch galvanized pipe
- 18 3/8 inch nipple (or 17 inch - see #14, page 2), 90 degree elbow, 90 degree street elbow, 6 inch nipple

Drain - 1 inch plug, stainless or PVC plastic
Float valve - plastic type ¾ inch inlet,(*Ritchie Co.* red plastic valve, or similar)

Optional

"Lift Eyes" - for each, 7 inches of 1/2 round steel or rebar bent to shape and welded onto side plates; minimum four "lift eyes" required

Figure 1 Trough Installed on a Range Site
(shown drained for winter)

NOTE

1. REFER TO FIGURE 3 PAGE 6 FOR DETAILS OF END PLATE EXTENSION
2. LID IS NOT SHOWN REFER TO FIGURE 4 PAGE 6 FOR DETAILS
3. REFER TO FIGURE 1 (PICTORIAL) AND FIGURE 5 (PERSPECTIVE) FOR ADDITIONAL VIEWS OF TROUGH
4. FOUR OPTIONAL "LIFT EYES" MAY BE WELDED TO CORNERS OF EACH SIDE PLATE INSTEAD OF USING LIFT HOLES.

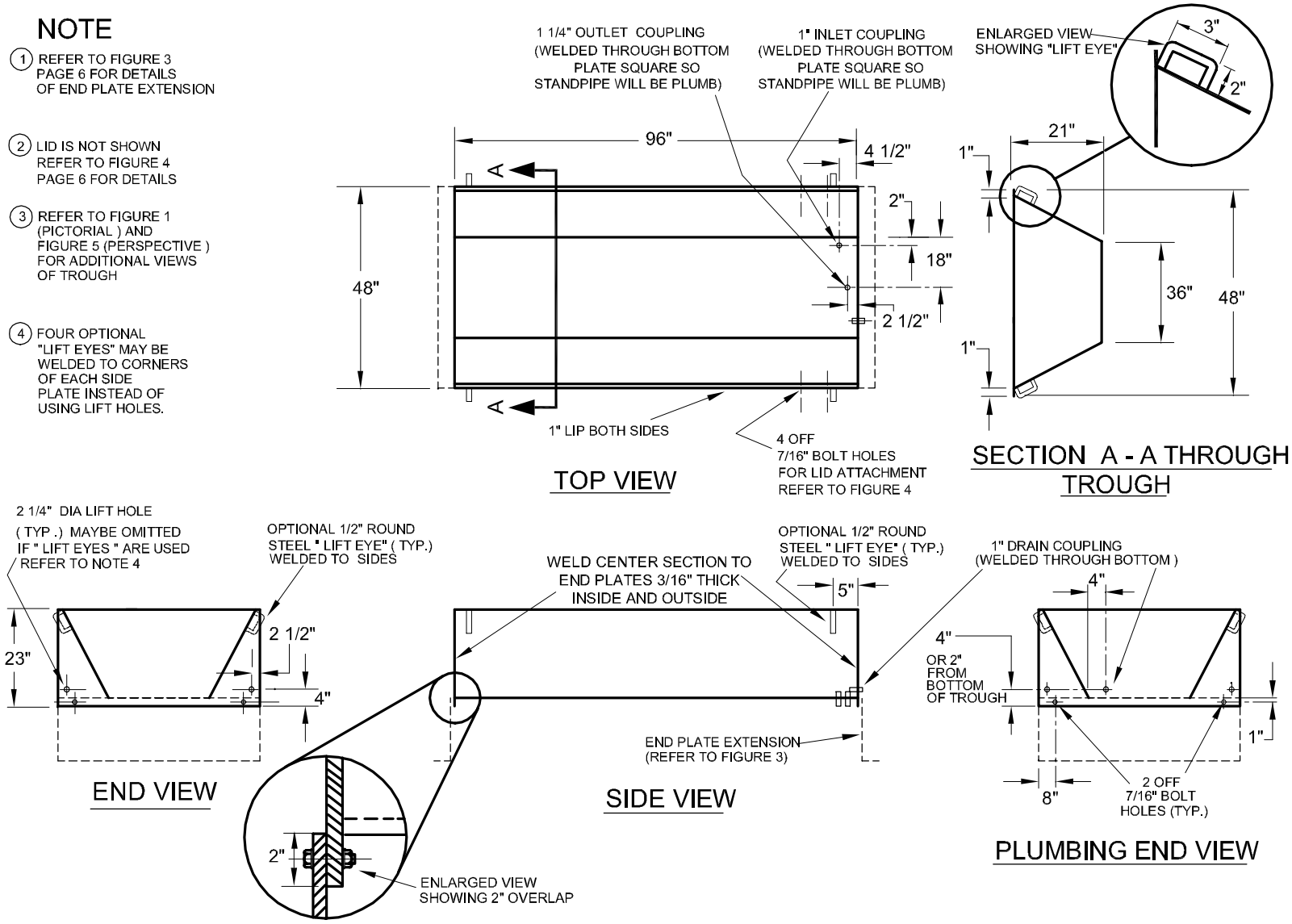

FIGURE 2 TROUGH CENTER SECTION AND END PLATES C/W EXTENSIONS

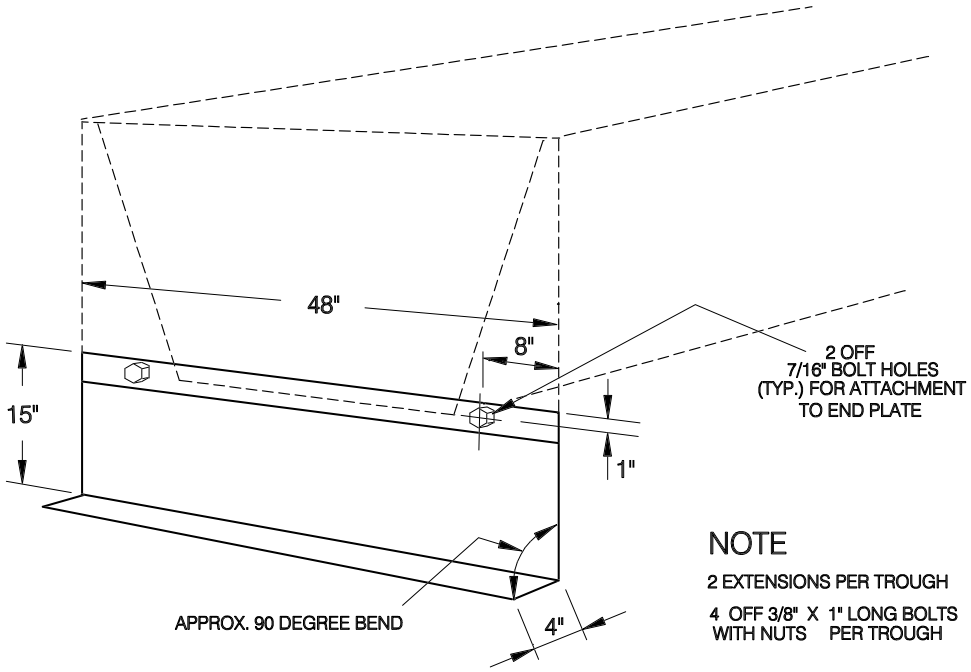

FIGURE 3 END PLATE EXTENSION

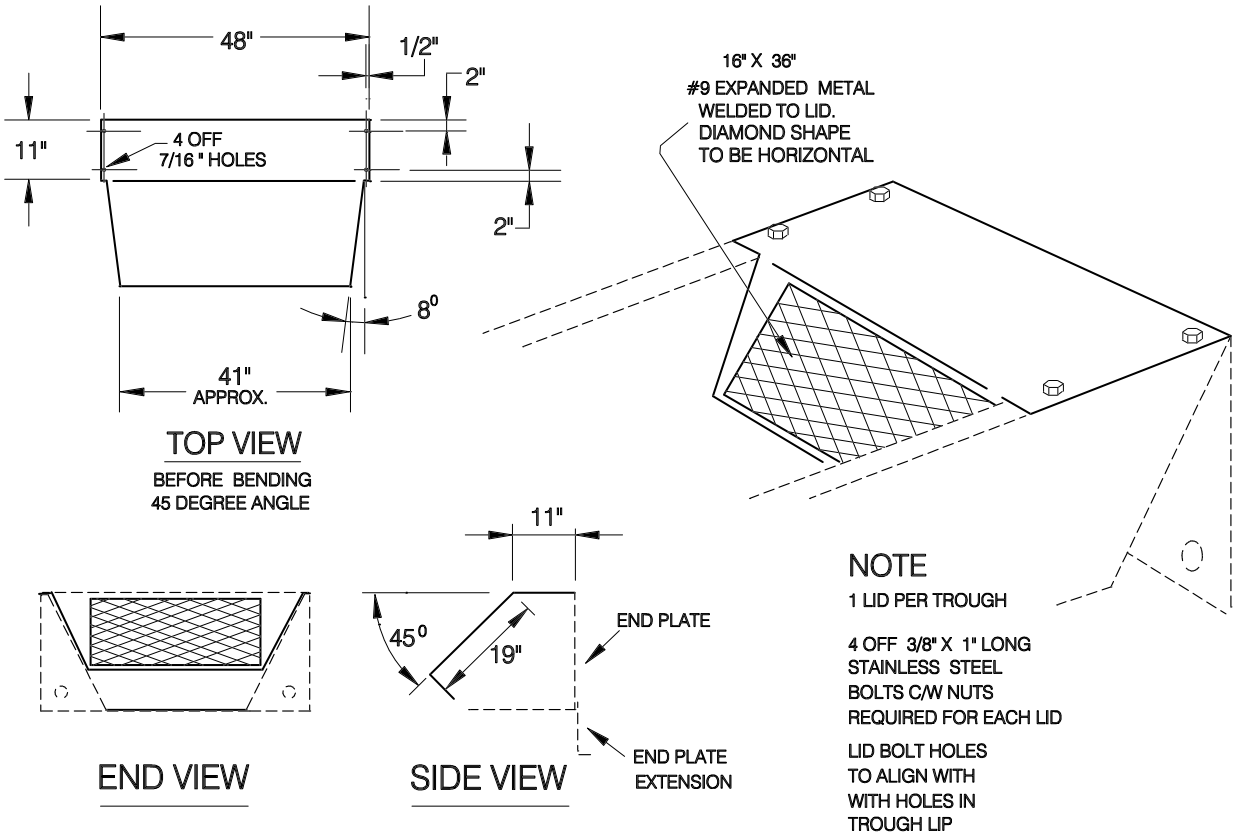

FIGURE 4 LID

FIGURE 5

PERSPECTIVE VIEW OF PLUMBING END OF TROUGH

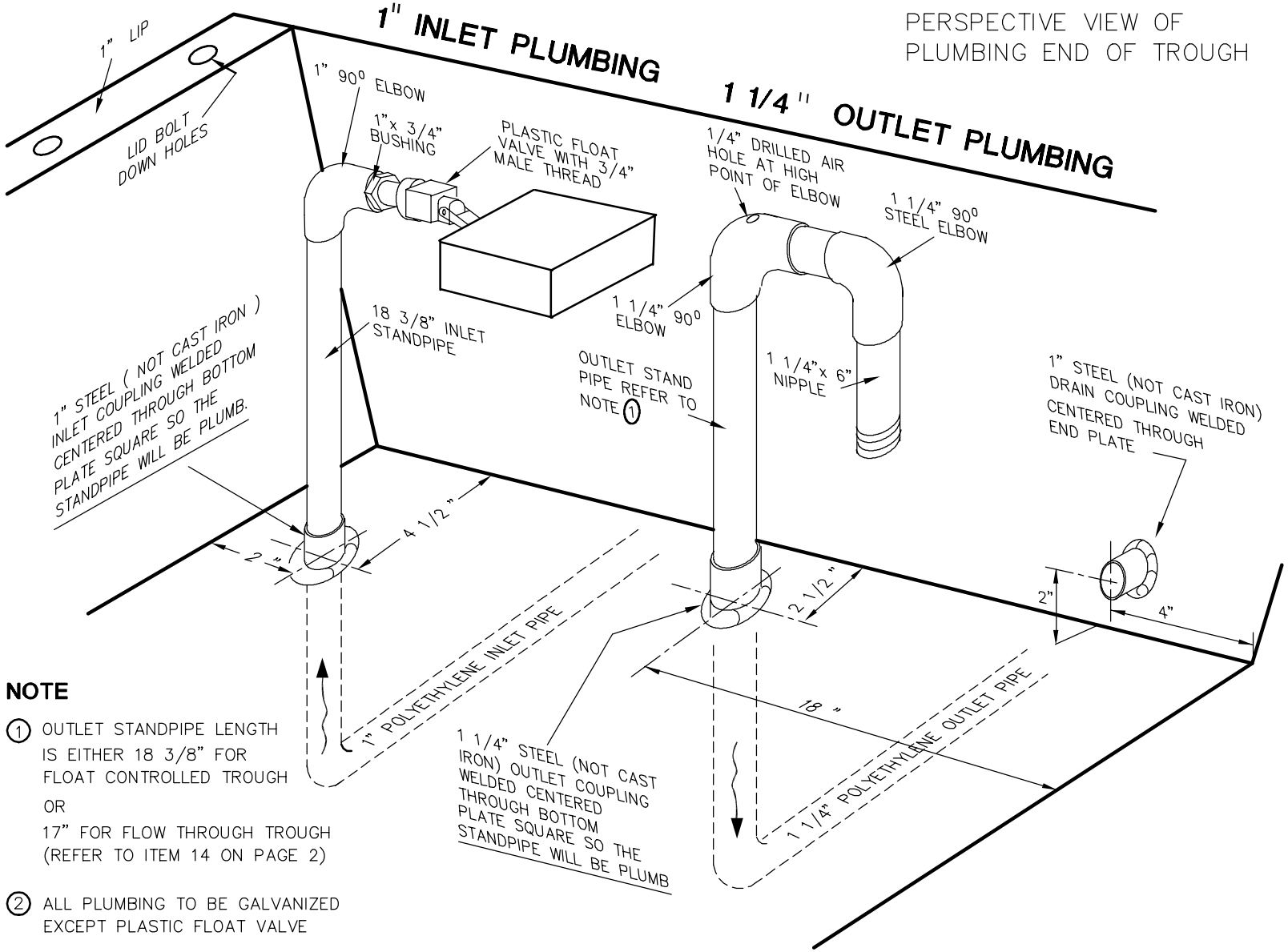

NOTE

1. OUTLET STANDPIPE LENGTH IS EITHER 18 3/8" FOR FLOAT CONTROLLED TROUGH
   OR
   17" FOR FLOW THROUGH TROUGH (REFER TO ITEM 14 ON PAGE 2)

2. ALL PLUMBING TO BE GALVANIZED EXCEPT PLASTIC FLOAT VALVE

Trough Installation

The trough is designed to as simple as possible to install.

lifting the trough

1. Use a machine with lift chain hooked to lift holes or lift eyes.

locating the supply line

2. If the supply line runs down to the trough from upslope (as in gravity systems and possibility some pumped systems), it must first go to a drain box lower than the trough, then up to the trough (to ensure the supply line can be completely drained).
3. If the supply line runs up to the trough from downslope (as in most pumping systems), it need only be laid in a continuous rise to the trough to ensure complete draining.

locating the trough

4. The trough site must be level, firm ground with good site drainage and sufficient livestock access.
5. Excavate two trenches for the end plates centered 8 feet apart, that are about 1 ½ feet deep by 8 to 12 inches wide by 6 feet long that match the desired trough orientation.
6. Excavate the supply / outlet piping trench to intersect with one of the above trenches (this will be the plumbing end of the trough).
7. Lower the trough in place and level it as required. Note that the trough is meant to lay on the bottom plate so maximum ground contact of this plate is important. Do not use the end plate extension feet as supports - they are only to prevent uplift of the trough not to support its weight.
8. Connect the polyethylene supply and outlet pipes to the underneath plumbing. The trough may need to be partially lifted for access.
9. Bed the pipe, backfill and compact the trenches.

locating the outlet line

10. The outlet line from the trough is placed on a continuous downslope. There are three possible plumbing situations:
    - it is a float controlled trough and the outlet line takes overflow water to an inground rock pit (likely within 50 feet - use 1 ¼ pipe)
    - it is a flow-through trough and the outlet water is going back to the original drainage system from where is was piped (likely no more than 100 feet or so - use 1 ¼ pipe for the first 50 feet then reduce to 1 inch)
    - it is a flow-through trough and the water is going to gravity-supply a second trough at a lower site (use 1 ¼ pipe for the first 25 feet of elevation fall then reduce to 1 inch to the next trough)

installing the pipeline drain

11. The steel pipe fittings at the trough must be able to be drained for winter. Part will drain into the trough itself, but the underneath plumping must drain into a lower point than the trough:
    - the supply line will drain into the supply drain box when plumbed as required in points #2 or #3 above; and
    - the outlet line will drain when installed as in point #10 above.

installing the valves

12. The water inlet point of the supply line will have a supply valve (with an air inlet downstream from the valve) or the inlet must be able to be removed from the water to allow complete system draining.

13. The drain box (refer to point #2 above) will have a drain valve which directs the supply water either up to the trough or down to the drain.

Trough Maintenance

Minimal maintenance is required where the trough and piping system have installed properly and no vandalism occurs. The basic maintenance required is:

start of season

1. At the start of each season, ensure the inlet screen on the supply line at the water development is in place and clean.
2. Open the supply valve (or place the inlet screen into the water).
3. Allow some water to flow down to the supply line drain ensuring the line is running full and free of any blockage. Close the drain valve.
4. Reinstall the trough drain plug and allow the trough to fill. Remove any accumulated debris from the trough.
5. Remove the trough lid and check the float valve setting for a minimum 2 inch freeboard.
6. Hold the float valve open (depress the float into the water) to allow water to flow through the outlet pipe to ensure it is not plugged.
7. Check that the air release hole in the outlet elbow is open and free of any buildup of material.
8. Once the system has filled and pressurized, check the piping from water inlet to the trough and on to the outlet and drains for leaks and repair as required.
9. Re-install the trough lid ensuring the lower edge is located behind the sidewall tabs that prevent lifting of the lid.
10. Check to ensure the site drainage is still away from the trough and re-contour as required (using a hand shovel for minor work; extensive work may require a tractor or backhoe).
11. Where appropriate, check the condition of the fence surrounding the water development and repair as required.

during use

12. During the season, periodically check that the freeboard is being maintained, the inlet screen is free of blockage and there are no piping leaks.

end of season

13. Winterize the system by closing the inlet (or removing the inlet screen, tying it back from the water) to allow air to enter the pipes.
14. Open the drain valve on the supply pipe below the trough to drain both the supply line from the water development and from the trough. Leave this valve partially open over winter.
15. Remove the trough drain plug and place in a secure location for the winter. Allow the trough to drain.

Other Information

For information specific to installing the complete water system, refer to Factsheet #590.306-3 ***Installing Summer Livestock Watering Systems – General Specifications and Requirements*** .

RESOURCE MANAGEMENT BRANCH
Ministry of Agriculture and Lands
1767 Angus Campbell Road
Abbotsford, BC V3G 2M3 Phone: (604) 556-3100

WRITTEN BY
Lance Brown
Engineering Technologist
Kamloops Office