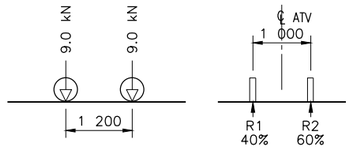

ATV LOADING GVW 1,835 kg

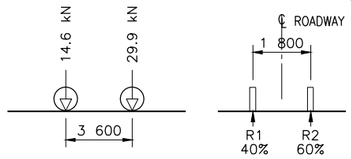

RANGE VEHICLE TYPE 1 GVW 4,500 kg

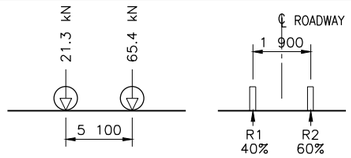

RANGE VEHICLE TYPE 2 GVW 8,850 kg

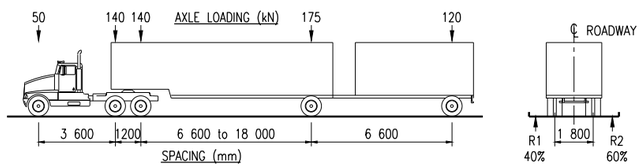

BCL-625 TRUCK GVW 63,710 KG

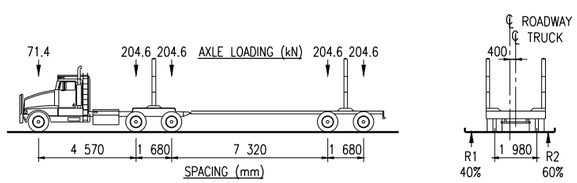

L-100 (OFF-HIGHWAY) GVW 90,680 kg

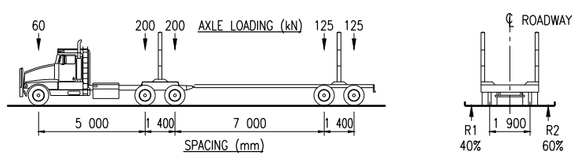

LIGHT OFF-HIGHWAY GVW 72,375 kg

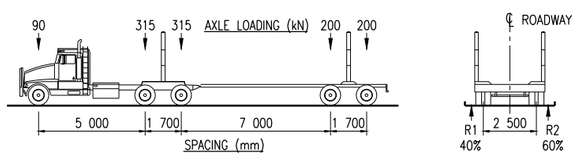

HEAVY OFF-HIGHWAY GVW 114,200 kg

DESIGN VEHICLES
(NOT TO SCALE)

DESIGN NOTES:

1. DESIGNED IN ACCORDANCE WITH CAN/CSA-S6-06 AND THE REQUIREMENTS OF MINISTRY OF FORESTS AND RANGE/MINISTRY OF TRANSPORTATION 'CATTLEGUARD STANDARDS AND SPECIFICATIONS' DATED NOVEMBER 21, 2008, WITH THE EXCEPTION OF RUNNING STRIPS.

2. CATTLEGUARDS ARE DESIGNED FOR VEHICLE LOADING(S) SHOWN ON THIS DRAWING.
   DESIGN LIVE LOADING CYCLES = 100,000.
   IMPACT FACTOR = 1.4
   MULTI-LANE LOAD COMBINATIONS CONSIDERED ARE SHOWN ON EACH CATTLEGUARD DRAWING.

3. THE ALLOWABLE BEARING PRESSURE OF SOIL SUPPORTING THE CATTLEGUARDS IS ASSUMED TO BE 200 kPa.

STRUCTURAL STEEL NOTES:

1. ALL STEELWORK SHALL CONFORM TO CSA-G40.20/G40.21 GRADE 300W, EXCEPT ROUND STEEL PIPE WHICH SHALL CONFORM TO ASTM STANDARD A53 Grade B (MINIMUM YIELD STRENGTH OF 241 MPa).

2. ALL WELDING SHALL BE UNDERTAKEN BY A COMPANY CERTIFIED BY THE CANADIAN WELDING BUREAU TO THE REQUIREMENTS OF CSA W47.1 DIVISION 3 OR BETTER AND ALL WELDING SHALL CONFORM TO THE CURRENT CSA STANDARD W59.

3. SEE TYPICAL DECK PIPE SPLICE DETAIL FOR SPLICING LIMITS.

4. CATTLEGUARDS SHALL BE PAINTED WITH A SINGLE COAT OF INORGANIC, ZINC-RICH PRIMER AT A DRY FILM THICKNESS (DFT) OF 50-75 MICRONS OVER THE PROFILE. THE ZINC-RICH PRIMER SHALL BE CHOSEN FROM THE APPROVED PRIMER LIST SPECIFIED IN BC MINISTRY OF TRANSPORTATION AND INFRASTRUCTURE RECOGNIZED PRODUCTS LIST FOR SYSTEM 'SS1'. SURFACE PREPARATION PRIOR TO PAINTING SHALL MEET THE REQUIREMENTS OF SSPC SP10 - NEAR WHITE METAL ABRASIVE BLAST WITH A SHARP 50-75 MICRON PROFILE.

5. FINISHED CATTLEGUARDS SHALL BE IDENTIFIED WITH A NAME OR TRADEMARK OF MANUFACTURER, MODEL TYPE, DESIGN LOAD AND "MONTH/YEAR" OF MANUFACTURE STAMPED OR WELDED ON EXTERIOR FACE OF EXTERIOR STRINGER AT MIDSPAN. ALL LETTERING TO BE A MINIMUM OF 25 mm HIGH.

ASSUME NOT TO SCALE

ORIGINAL SIGNED AND SEALED

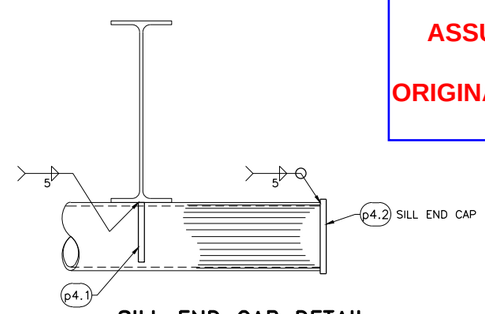

SILL END CAP DETAIL
SCALE - 1 : 10 (SILL OPTION 3 ONLY)

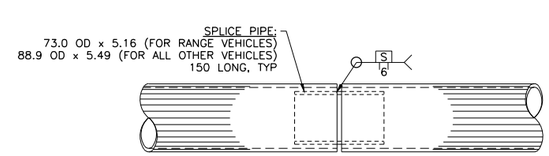

NO MORE THAN 4 SPLICES ALLOWED IN TOTAL DECK AND NO SPLICED PIPE SHALL BE ADJACENT TO ANOTHER SPLICED PIPE.
NO SPLICES WILL BE ALLOWED ON THE ATV CATTLEGUARD.

TYPICAL DECK PIPE SPLICE
SCALE - 1 : 10

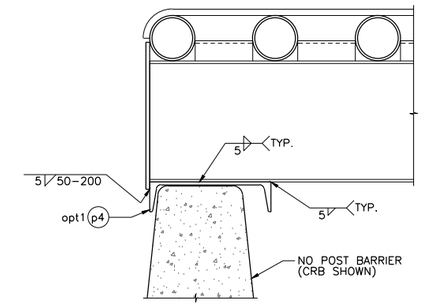

OPTION 1

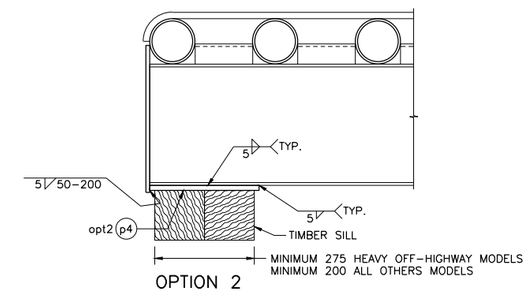

OPTION 2

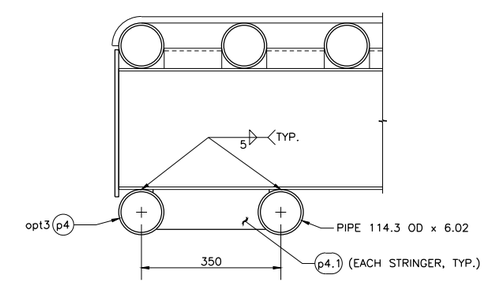

OPTION 3

3 PIPE SILL FOR HEAVY OFF-HIGHWAY VEHICLES ONLY
SEE DWG. No. STD-ECAT-010-05 AND STD-ECAT-010-06

SILL OPTIONS
NOT TO SCALE

McElhanney
McElhanney Consulting Services Ltd.
SUITE 500, 3960 QUADRA STREET
VICTORIA B.C. V8X 4A3
PH (250) 370-9221
FAX (250) 370-9223

SCALE AS SHOWN

Designed	DAN	Date 2010/06/03
Checked	EYW	Date 2010/06/03
Drawn	DRM	Date 2010/06/03

Rev	Date	DESCRIPTION	Init	
A	2015/02/06	RANGE VEHICLES TYPE 1 & 2 ADDED	SEM	

REVISIONS

BRITISH COLUMBIA
The Best Place on Earth

Ministry of Forests and Range
Engineering Branch, Field Operations Division

CATTLEGUARD NOTES AND STANDARD DETAILS

ORIGINAL SIGNED and SEALED BY: Ernie Wong, P.Eng.
MFR CHIEF ENGINEER: Brian Chow, P.Eng.
DESIGN ENGINEER: Ernie Wong, P.Eng.
DATE: JUNE 3, 2010
DATE
FILE No.
DRAWING No. STD-ECAT-010-01 A

CANCEL PRINTS BEARING PREVIOUS LETTER

File: Z:\Projects\12658 EYWRD Range Cattleguard Standard Drawing\12589-1.dwg Plot Time: Feb 06, 2015 - 9:27am

MATERIAL LIST

	PIECE	QTY	DESCRIPTION	LENGTH mm	WEIGHT kg
	p1	2	W150 x 18 STRINGER	2 438	87.5
	p2	14	DECK PIPE 48.3 OD x 5.08	1 524	115.4
	p3	2	PL10 x 180 END PLATE	1 524	43.1
opt1	p4	2	C310 x 31 MUDSILL	1 524	93.8
opt2	p4	2	PL13 x 200 MUDSILL	1 524	62.2
opt3	p4	4	PIPE 114.3 OD x 6.02 MUDSILL	1 524	98.1
opt3	p4.1	4	PL10 x 100 STIFFENER PLATE	290	9.1
opt3	p4.2	4	PL10 x 125 END CAP	475	18.6
	p5	26	L25 x 25 x 6.4 SPACER ANGLES	135	7.8
	p6	8	PL13 x 38 RUNNING STRIPS	2 505	77.7
	p7	2	PIPE 114.3 OD x 6.02 FENCE POST SLEEVE	240	7.7
	p8	2	PL6 x 50 SLEEVE BRACE	135	0.6
	p9	2	HSS-101.6 x 101.6 x 4.78 FENCE POST BRACES	140	3.9
				opt1	437.5 kg

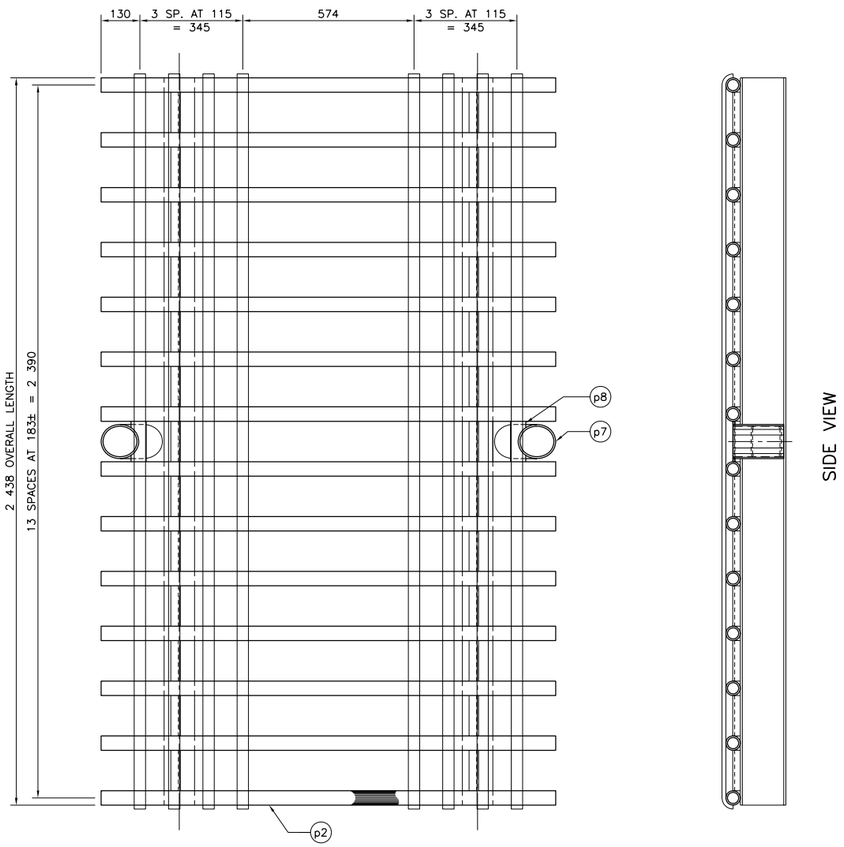

PLAN

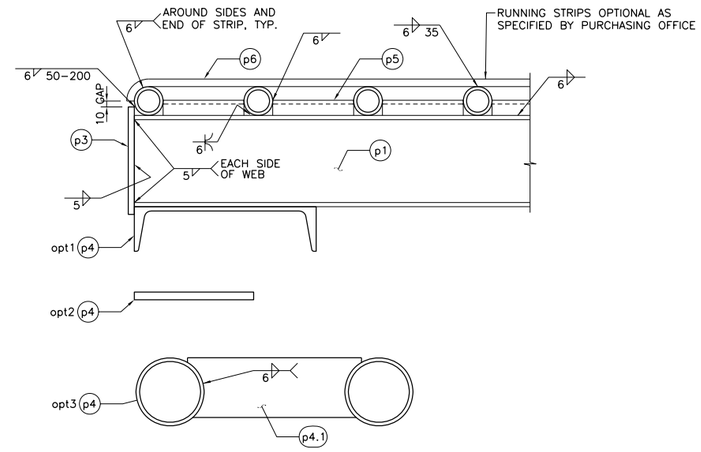

END PLATE AND SILL DETAIL

SCALE – 1 : 10
(WELDS SHOWN ARE TYPICAL FOR EACH ITEM)
(SEE DRAWING No. STD-ECAT-010-01 FOR SILL OPTIONS AND WELD DETAILS)

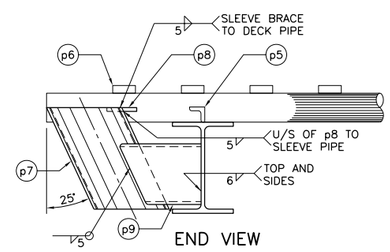

END VIEW

FENCE POST BRACE

SCALE – 1 : 10
(WELDS SHOWN ARE TYPICAL FOR EACH ITEM)

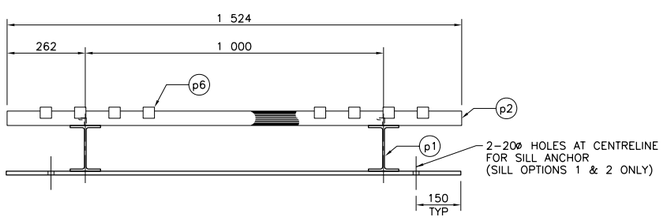

END VIEW (END PLATE NOT SHOWN FOR CLARITY)

PIPE DECK 1.524 m WIDE CATTLEGUARD

SCALE – 1 : 20

NOTES:

1. SEE DRAWING No. STD-ECAT-010-01 FOR DESIGN NOTES, STRUCTURAL STEEL NOTES AND SILL OPTIONS.
2. NO SPLICES WILL BE ALLOWED FOR THIS CATTLEGUARD.
3. MODEL TYPE ECAT-010-02.

ASSUME NOT TO SCALE

ORIGINAL SIGNED AND SEALED

Sargent & Associates Engineering Ltd.
HEAD OFFICE
1595 Bay Street, Unit B, Victoria, B.C. V8R 2B5
Phone: 250.370.9221 Fax: 250.370.9223

SCALE AS SHOWN

Designed	DAN	Date	2010/06/03
Checked	EYW	Date	2010/06/03
Drawn	DRM	Date	2010/06/03

Rev	Date	DESCRIPTION	Init

REVISIONS

BRITISH COLUMBIA
The Best Place on Earth

Ministry of Forests and Range
Engineering Branch, Field Operations Division

CATTLEGUARD 1.524 m x 2.438 m LONG FOR ATV VEHICLE

ORIGINAL SIGNED and SEALED BY: Ernie Wong, P.Eng.
MFR CHIEF ENGINEER: Brian Chow, P.Eng.
DESIGN ENGINEER: Ernie Wong, P.Eng.
DATE: JUNE 3, 2010
DATE
FILE No.
DRAWING No. STD-ECAT-010-02

CANCEL PRINTS BEARING PREVIOUS LETTER

File: C:\Folder for Backup\12529\MoFR Cattleguards\2529-2.dwg Plot Time: Jun 03, 2010 - 4:44pm

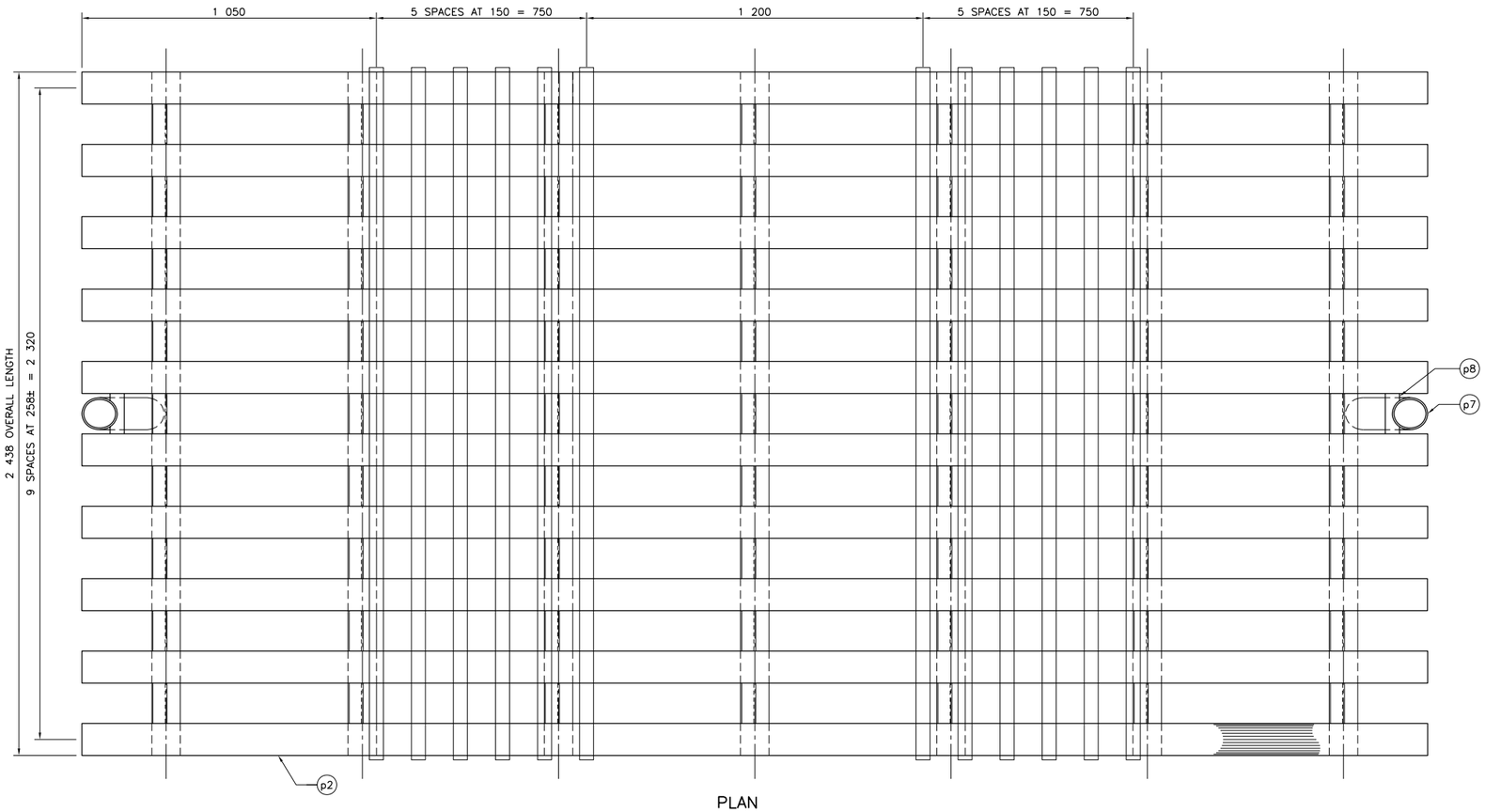

PLAN

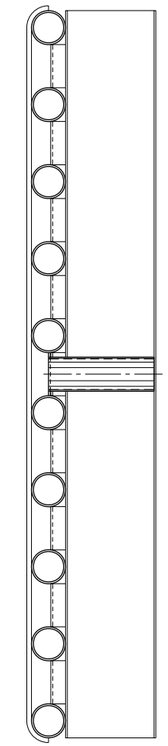

SIDE VIEW

MATERIAL LIST

	PIECE	QTY	DESCRIPTION	LENGTH mm	WEIGHT kg
	p1	7	W310 x 21 STRINGER	2 438	360.1
	p2	10	DECK PIPE 114.3 OD x 6.02	4 800	772.8
	p3	2	PL10 x 370 END PLATE	4 800	278.8
opt1	p4	2	C310 x 31 MUDSILL	4 800	295.5
opt2	p4	2	PL13 x 200 MUDSILL	4 800	195.9
opt3	p4	4	PIPE 114.3 OD x 6.02 MUDSILL	4 800	309.1
opt3	p4.1	14	PL10 x 100 STIFFENER PLATE	290	31.9
opt3	p4.2	4	PL10 x 125 END CAP	475	18.6
	p5	63	L51 x 51 x 6.4 SPACER ANGLES	144	43.1
	p6	12	PL16 x 50 RUNNING STRIPS	2 555	192.5
	p7	2	PIPE 114.3 OD x 6.02 FENCE POST SLEEVE	444	14.3
	p8	2	PL6 x 50 SLEEVE BRACE	144	0.7
				opt1	1 957.8 kg

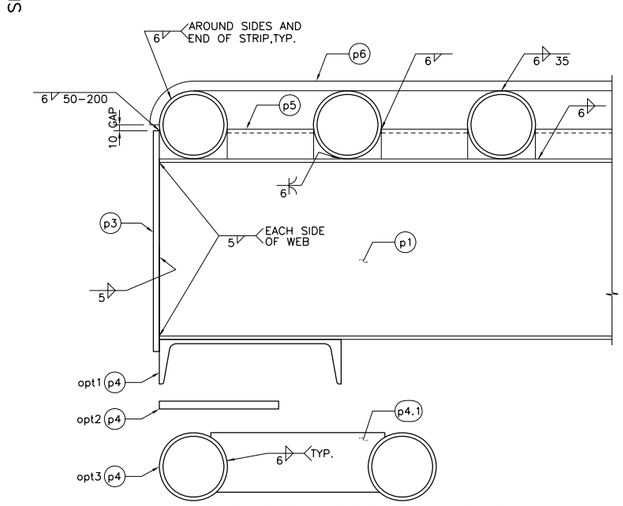

END PLATE AND SILL DETAIL
SCALE – 1 : 10
(WELDS SHOWN ARE TYPICAL FOR EACH ITEM)
(SEE DRAWING No. STD–ECAT–010–01
FOR SILL OPTIONS AND WELD DETAILS)

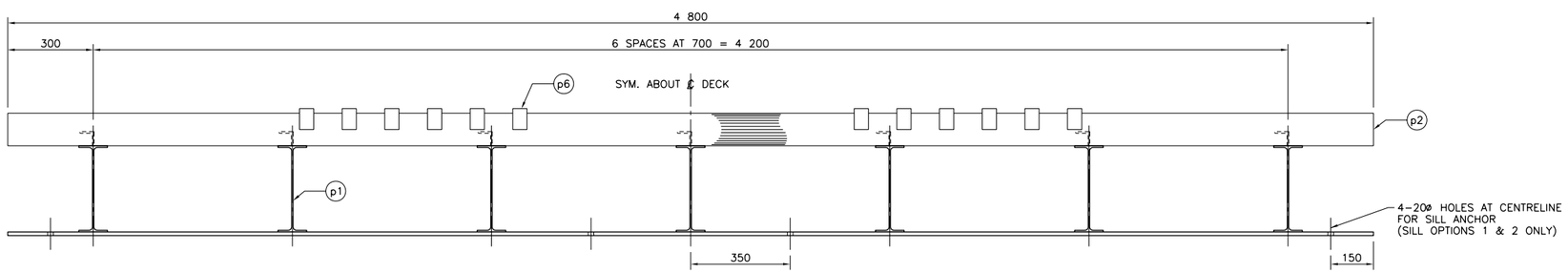

END VIEW (END PLATE NOT SHOWN FOR CLARITY)

PIPE DECK 4.80 m WIDE CATTLEGUARD
SCALE – 1 : 20

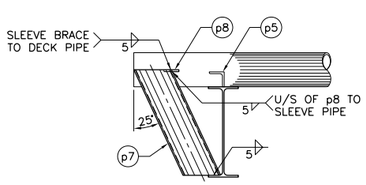

END VIEW

FENCE POST BRACE
SCALE – 1 : 20
(WELDS SHOWN ARE TYPICAL FOR EACH ITEM)

ASSUME NOT TO SCALE

ORIGINAL SIGNED AND SEALED

NOTES:

1. SEE DRAWING No. STD–ECAT–010–01 FOR DESIGN NOTES, STRUCTURAL STEEL NOTES, SILL OPTIONS AND SPLICE DETAILS.
2. NO MORE THAN 4 SPLICES ALLOWED IN TOTAL DECK AND NO SPLICED PIPE SHALL BE ADJACENT TO ANOTHER SPLICED PIPE.
3. MODEL TYPE ECAT–010–03.

Sargent & Associates Engineering Ltd.
HEAD OFFICE
1595 Bay Street, Unit B, Victoria, B.C. V8R 2B5
Phone: 250.370.9221 Fax: 250.370.9223

SCALE AS SHOWN

Designed	DAN	Date 2010/06/03
Checked	EYW	Date 2010/06/03
Drawn	DRM	Date 2010/06/03

Rev	Date	DESCRIPTION	Init

REVISIONS

BRITISH COLUMBIA
The Best Place on Earth

Ministry of Forests and Range
Engineering Branch, Field Operations Division

CATTLEGUARD 4.8 m x 2.438 m LONG FOR BCL–625, L–100 & LIGHT OFF–HIGHWAY VEHICLES

ORIGINAL SIGNED and SEALED BY: Ernie Wong, P.Eng.
MFR CHIEF ENGINEER: Brian Chow, P.Eng.
DESIGN ENGINEER: Ernie Wong, P.Eng.
DATE: JUNE 3, 2010
DATE
FILE No.
DRAWING No. STD–ECAT–010–03

CANCEL PRINTS BEARING PREVIOUS LETTER

File: C:\Folder for Backup\10.2509\MFR Cattleguards\2509-3.dwg Plot Time: Jun 03, 2010 – 4:44pm

MATERIAL LIST

	PIECE	QTY	DESCRIPTION	LENGTH mm	WEIGHT kg
	p1	11	W310 x 24 STRINGER	2 438	639.7
	p2	10	DECK PIPE 114.3 OD x 6.02	7 300	1 175.3
	p3	2	PL10 x 370 END PLATE	7 300	424.0
opt1	p4	2	C310 x 31 MUDSILL	7 300	449.5
opt2	p4	2	PL13 x 200 MUDSILL	7 300	298.0
opt3	p4	4	PIPE 114.3 OD x 6.02 MUDSILL	7 300	470.1
opt3	p4.1	22	PL10 x 100 STIFFENER PLATE	290	50.1
opt3	p4.2	4	PL10 x 125 END CAP	475	18.6
	p5	99	L51 x 51 x 6.4 SPACER ANGLES	144	67.7
	p6	24	PL16 x 50 RUNNING STRIPS	2 555	385.1
	p7	2	PIPE 114.3 OD x 6.02 FENCE POST SLEEVE	444	14.3
	p8	2	PL6 x 50 SLEEVE BRACE	144	0.7
				opt1	3 156.3 kg

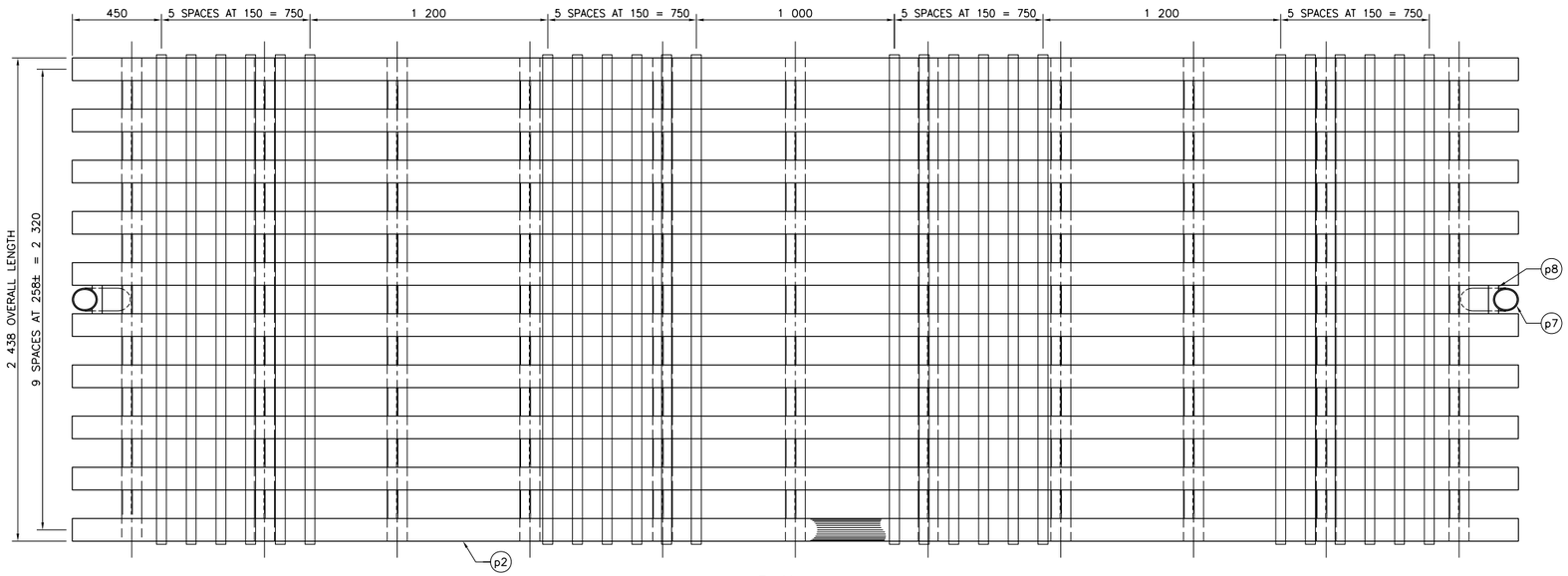

PLAN

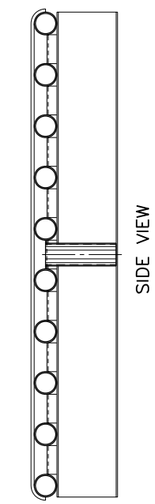

SIDE VIEW

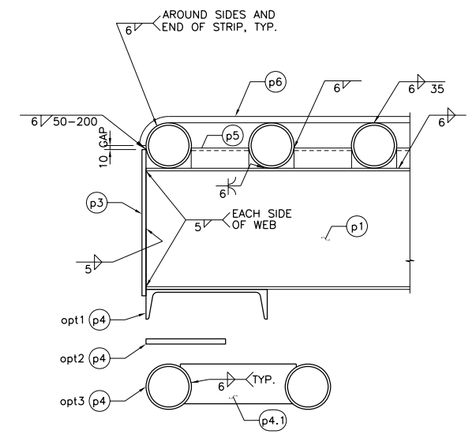

END PLATE AND SILL DETAIL

SCALE – 1 : 15
(WELDS SHOWN ARE TYPICAL FOR EACH ITEM)
(SEE DRAWING No. STD–ECAT–010–01
FOR SILL OPTIONS AND WELD DETAILS)

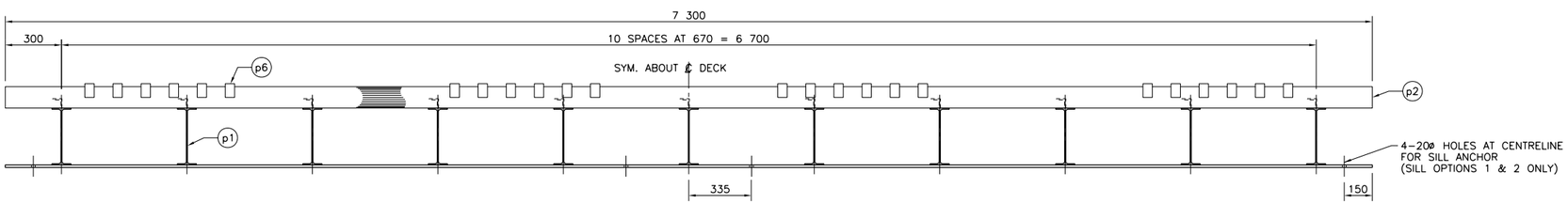

END VIEW (END PLATE NOT SHOWN FOR CLARITY)

PIPE DECK 7.30 m WIDE CATTLEGUARD

SCALE – 1 : 30

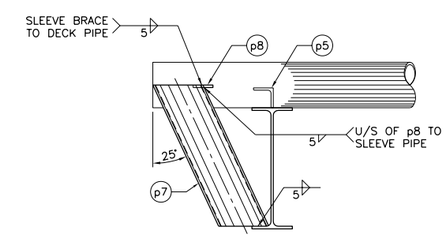

END VIEW

FENCE POST BRACE

SCALE – 1 : 15
(WELDS SHOWN ARE TYPICAL FOR EACH ITEM)

NOTES:

1. SEE DRAWING No. STD–ECAT–010–01 FOR DESIGN NOTES, STRUCTURAL STEEL NOTES, SILL OPTIONS AND SPLICE DETAILS.
2. NO MORE THAN 4 SPLICES ALLOWED IN TOTAL DECK AND NO SPLICED PIPE SHALL BE ADJACENT TO ANOTHER SPLICED PIPE.
3. THIS CATTLEGUARD HAS BEEN DESIGNED WITH THE FOLLOWING MULTI–LANE VEHICLE LOAD COMBINATIONS:
   - 90% BCL–625 IN BOTH LANES
   - 100% L–100 + 70% BCL–625
   - 100% LIGHT OFF–HIGHWAY + 70% BCL–625
4. MODEL TYPE ECAT–010–04.

ASSUME NOT TO SCALE

ORIGINAL SIGNED AND SEALED

Sargent & Associates Engineering Ltd.
HEAD OFFICE
1595 Bay Street, Unit B, Victoria, B.C. V8R 2B5
Phone: 250.370.9221 Fax: 250.370.9223

SCALE AS SHOWN

Designed	DAN	Date 2010/06/03
Checked	EYW	Date 2010/06/03
Drawn	DRM	Date 2010/06/03

Rev	Date	DESCRIPTION	Init

REVISIONS

BRITISH COLUMBIA
The Best Place on Earth

Ministry of Forests and Range
Engineering Branch, Field Operations Division

CATTLEGUARD 7.3 m x 2.438 m LONG FOR
BCL–625, L–100 & LIGHT OFF–HIGHWAY VEHICLES

ORIGINAL SIGNED and SEALED BY: Ernie Wong, P.Eng.
MFR CHIEF ENGINEER: Brian Chow, P.Eng.
DESIGN ENGINEER: Ernie Wong, P.Eng.
DATE: JUNE 3, 2010
DATE
FILE No.
DRAWING No. STD–ECAT–010–04

CANCEL PRINTS BEARING PREVIOUS LETTER

File: C:\Folder for Backup\10.2509\MoFR Cattleguards\2509-4.dwg Plot Time: Jun 03, 2010 - 4:45pm

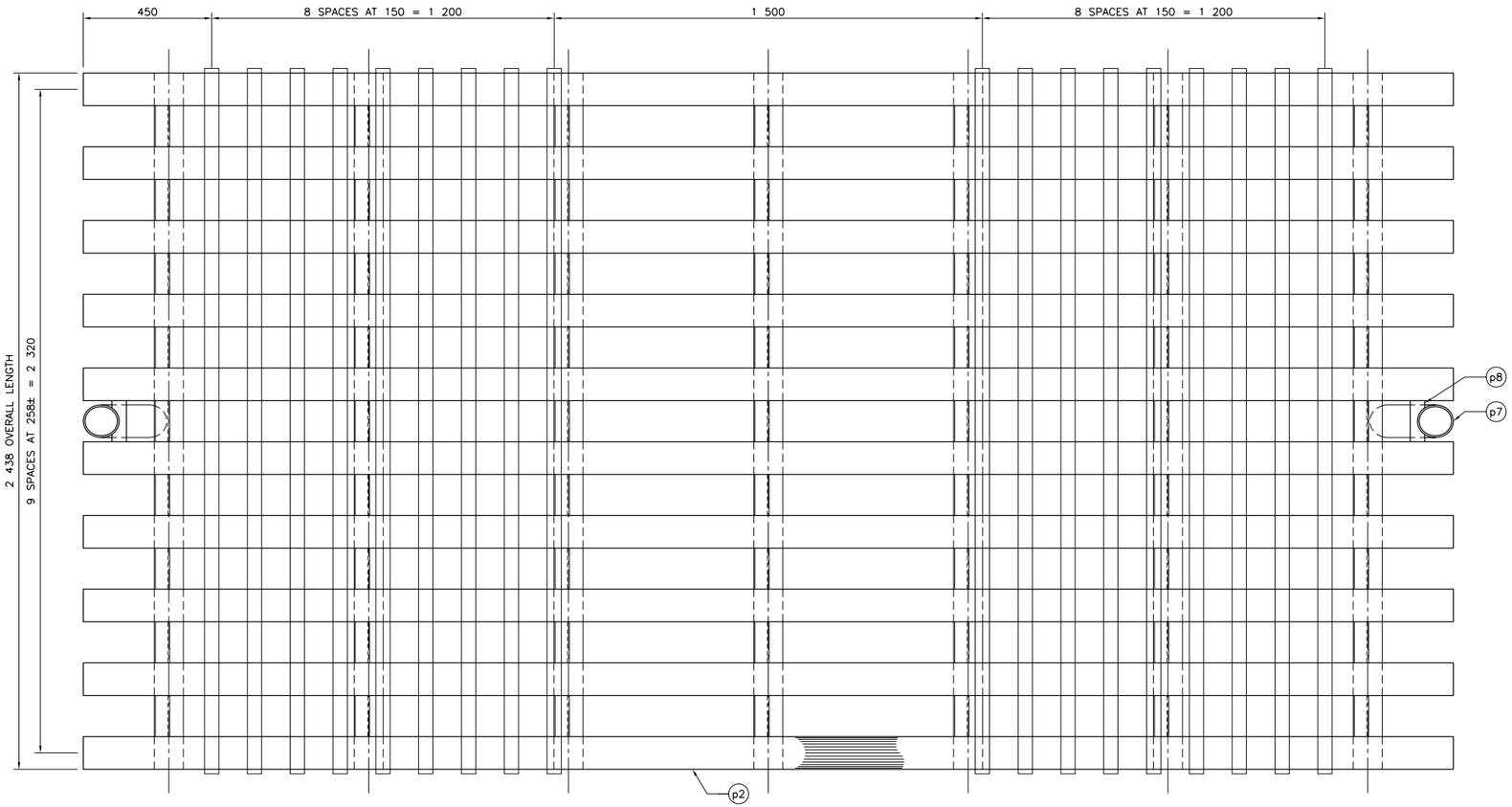

PLAN

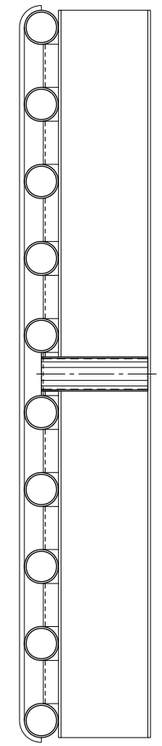

SIDE VIEW

MATERIAL LIST

	PIECE	QTY	DESCRIPTION	LENGTH mm	WEIGHT kg
	p1	7	W310 x 28 STRINGER	2 438	483.6
	p2	10	DECK PIPE 114.3 OD x 6.02	4 800	772.8
	p3	2	PL10 x 370 END PLATE	4 800	278.8
opt1	p4	2	C310 x 31 MUDSILL	4 800	295.5
opt2	p4	2	PL13 x 275 MUDSILL	4 800	269.4
opt3	p4	6	PIPE 114.3 OD x 6.02 MUDSILL	4 800	463.7
opt3	p4.1	28	PL10 x 100 STIFFENER PLATE	115	25.3
opt3	p4.2	4	PL10 x 125 END CAP	475	18.6
	p5	63	L51 x 51 x 6.4 SPACER ANGLES	144	43.1
	p6	18	PL16 x 50 RUNNING STRIPS	2 555	288.8
	p7	2	PIPE 114.3 OD x 6.02 FENCE POST SLEEVE	444	14.3
	p8	2	PL6 x 50 SLEEVE BRACE	144	0.7
				opt1	2 177.6 kg

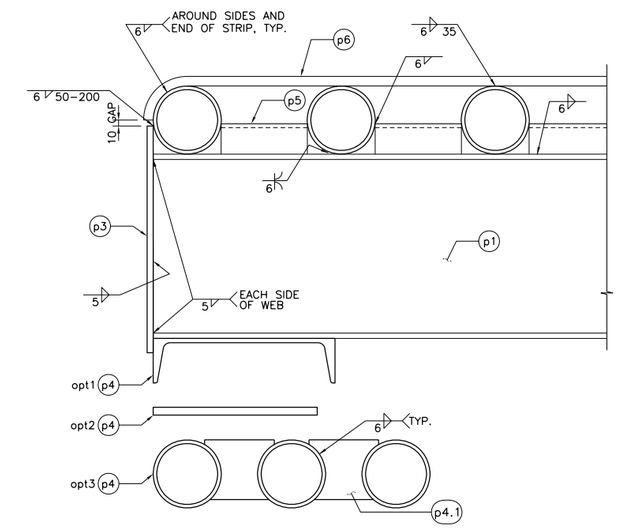

END PLATE AND SILL DETAIL

SCALE – 1 : 10
(WELDS SHOWN ARE TYPICAL FOR EACH ITEM) (SEE DRAWING No. STD–ECAT–010–01 FOR SILL OPTIONS AND WELD DETAILS)

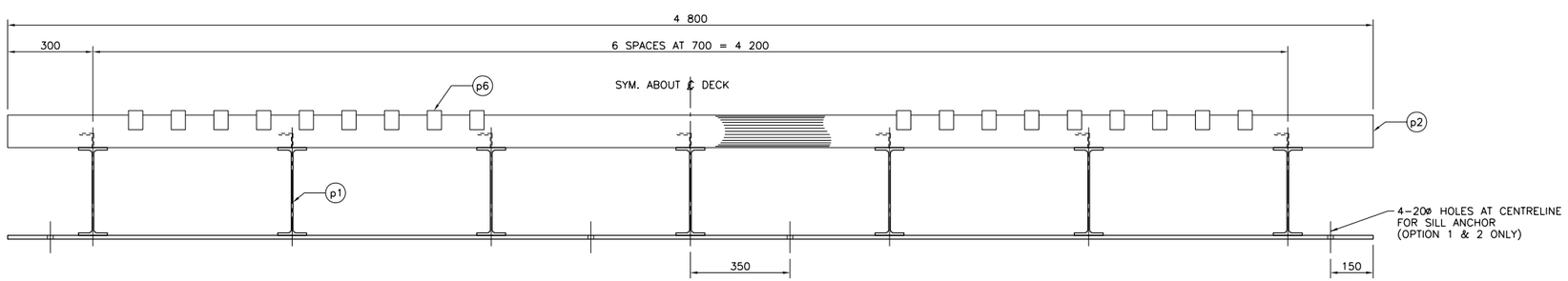

END VIEW (END PLATE NOT SHOWN FOR CLARITY)

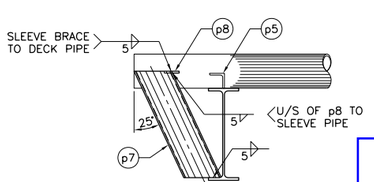

END VIEW

FENCE POST BRACE

SCALE – 1 : 20
(WELDS SHOWN ARE TYPICAL FOR EACH ITEM)

PIPE DECK 4.80 m WIDE CATTLEGUARD

SCALE – 1 : 20

ASSUME NOT TO SCALE

ORIGINAL SIGNED AND SEALED

NOTES:

1. SEE DRAWING No. STD–ECAT–010–01 FOR DESIGN NOTES, STRUCTURAL STEEL NOTES, SILL OPTIONS AND SPLICE DETAILS.
2. NO MORE THAN 4 SPLICES ALLOWED IN TOTAL DECK AND NO SPLICED PIPE SHALL BE ADJACENT TO ANOTHER SPLICED PIPE.
3. MODEL TYPE ECAT–010–05.

Sargent & Associates Engineering Ltd.
HEAD OFFICE
1595 Bay Street, Unit B, Victoria, B.C. V8R 2B5
Phone: 250.370.9221 Fax: 250.370.9223

SCALE AS SHOWN

Designed	EYW	Date 2010/06/03
Checked	DAN	Date 2010/06/03
Drawn	DRM	Date 2010/06/03

Rev	Date	DESCRIPTION	Init

REVISIONS

BRITISH COLUMBIA
The Best Place on Earth

Ministry of Forests and Range
Engineering Branch, Field Operations Division

CATTLEGUARD 4.8 m x 2.438 m LONG
FOR HEAVY OFF–HIGHWAY VEHICLE

ORIGINAL SIGNED and SEALED BY: Ernie Wong, P.Eng.	MFR CHIEF ENGINEER: Brian Chow, P.Eng.
DESIGN ENGINEER: Ernie Wong, P.Eng. DATE: JUNE 3, 2010	DATE
FILE No.	DRAWING No. STD–ECAT–010–05

CANCEL PRINTS BEARING PREVIOUS LETTER

File: C:\Folder for Backup\10.2509\MFR Cattleguards\2509-5.dwg Plot Time: Jun 03, 2010 – 4:45pm

MATERIAL LIST

	PIECE	QTY	DESCRIPTION	LENGTH mm	WEIGHT kg
	p1	11	W310 x 33 STRINGER	2 438	880.0
	p2	10	DECK PIPE 114.3 OD x 6.02	7 300	1 175.3
	p3	2	PL10 x 370 END PLATE	7 300	424.0
opt1	p4	2	C310 x 31 MUDSILL	7 300	449.5
opt2	p4	2	PL13 x 275 MUDSILL	7 300	409.7
opt3	p4	6	PIPE 114.3 OD x 6.02 MUDSILL	7 300	705.2
opt3	p4.1	44	PL10 x 100 STIFFENER PLATE	115	39.7
opt3	p4.2	4	PL10 x 125 END CAP	475	18.6
	p5	99	L51 x 51 x 6.4 SPACER ANGLES	144	67.7
	p6	32	PL16 x 50 RUNNING STRIPS	2 555	513.4
	p7	2	PIPE 114.3 OD x 6.02 FENCE POST SLEEVE	444	14.3
	p8	2	PL6 x 50 SLEEVE BRACE	144	0.7
				opt1	3 524.9 kg

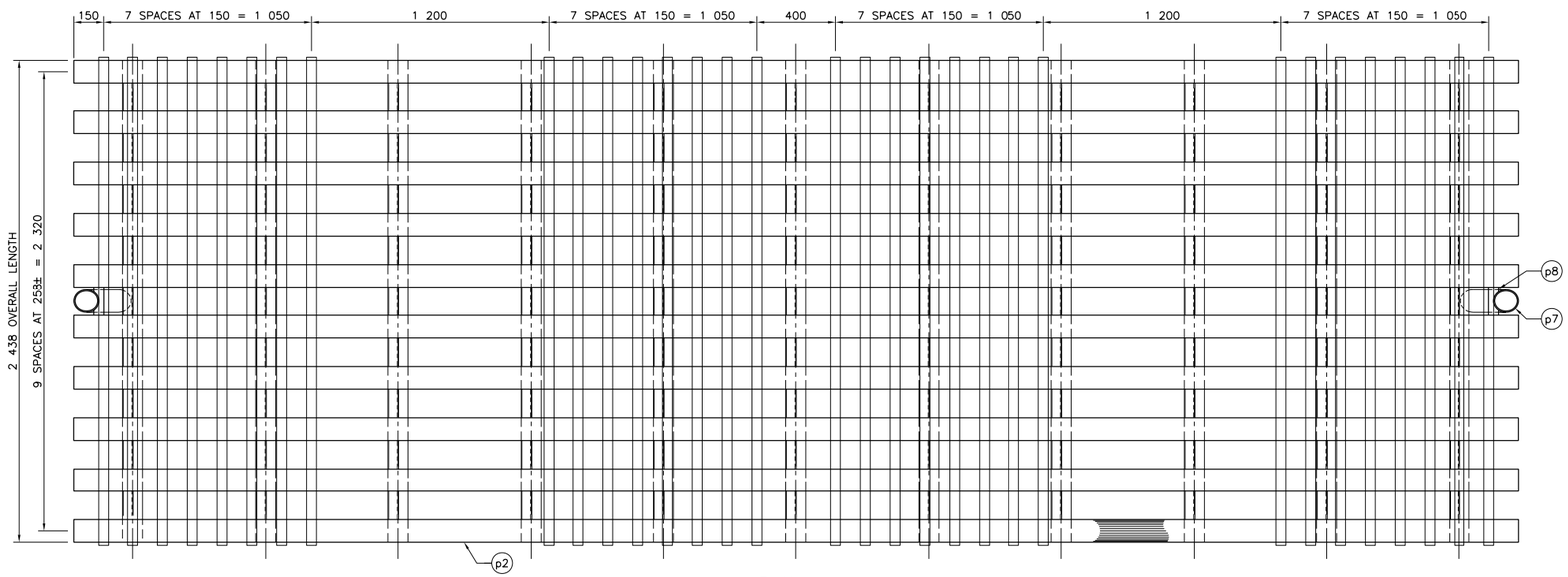

PLAN

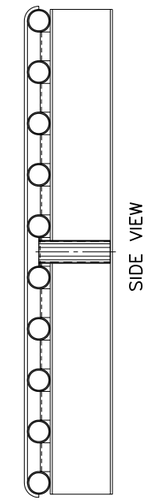

SIDE VIEW

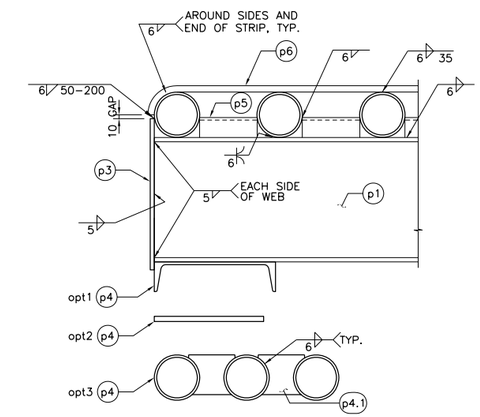

END PLATE AND SILL DETAIL

SCALE – 1 : 15
(WELDS SHOWN ARE TYPICAL FOR EACH ITEM)
(SEE DRAWING No. STD–ECAT–010–01
FOR SILL OPTIONS AND WELD DETAILS)

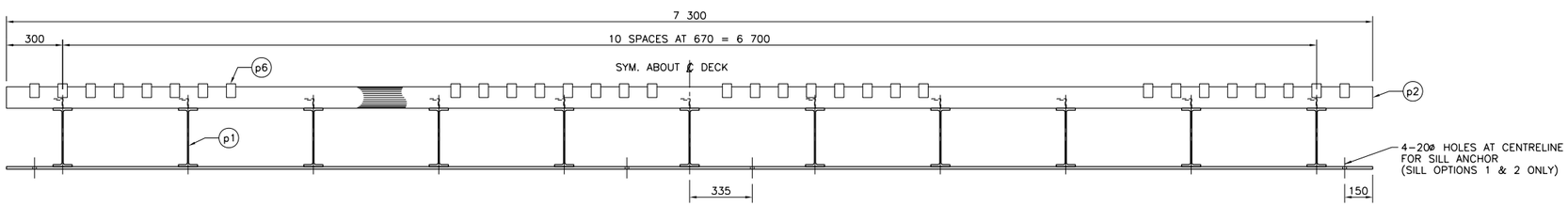

END VIEW (END PLATE NOT SHOWN FOR CLARITY)

PIPE DECK 7.30 m WIDE CATTLEGUARD

SCALE – 1 : 30

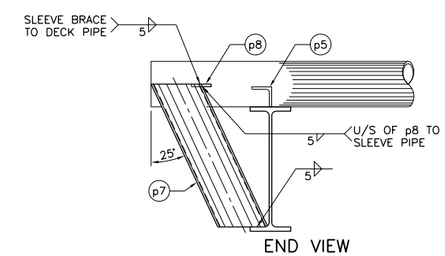

END VIEW

FENCE POST BRACE

SCALE – 1 : 15
(WELDS SHOWN ARE TYPICAL FOR EACH ITEM)

NOTES:

1. SEE DRAWING No. STD–ECAT–010–01 FOR DESIGN NOTES, STRUCTURAL STEEL NOTES, SILL OPTIONS AND SPLICE DETAILS.
2. NO MORE THAN 4 SPLICES ALLOWED IN TOTAL DECK AND NO SPLICED PIPE SHALL BE ADJACENT TO ANOTHER SPLICED PIPE.
3. THIS CATTLEGUARD HAS BEEN DESIGNED WITH THE FOLLOWING MULTI–LANE VEHICLE LOAD COMBINATION:
   – 100% HEAVY OFF–HIGHWAY + 70% BCL–625
4. MODEL TYPE ECAT–010–06.

ASSUME NOT TO SCALE

ORIGINAL SIGNED AND SEALED

Sargent & Associates Engineering Ltd.
HEAD OFFICE
1595 Bay Street, Unit B, Victoria, B.C. V8R 2B5
Phone: 250.370.9221 Fax: 250.370.9223

SCALE AS SHOWN

Designed	EYW	Date 2010/06/03
Checked	DAN	Date 2010/06/03
Drawn	DRM	Date 2010/06/03

Rev	Date	DESCRIPTION	Init

REVISIONS

BRITISH COLUMBIA
The Best Place on Earth

Ministry of Forests and Range
Engineering Branch, Field Operations Division

CATTLEGUARD 7.3 m x 2.438 m LONG
FOR HEAVY OFF–HIGHWAY VEHICLE

ORIGINAL SIGNED and SEALED BY: Ernie Wong, P.Eng.
MFR CHIEF ENGINEER: Brian Chow, P.Eng.
DESIGN ENGINEER: Ernie Wong, P.Eng.
DATE: JUNE 3, 2010
DATE
FILE No.
DRAWING No. STD–ECAT–010–06

CANCEL PRINTS BEARING PREVIOUS LETTER

File: C:\Folder for Backup\10.2509\MFR Cattleguards\2509-6.dwg Plot Time: Jun 03, 2010 – 4:46pm

MATERIAL LIST

	PIECE	QTY	DESCRIPTION	LENGTH mm	WEIGHT kg
	p1	12	W310 x 24 STRINGER	2 438	696.3
	p2	10	DECK PIPE 114.3 OD x 6.02	8 000	1 288.0
	p3	2	PL10 x 370 END PLATE	8 000	464.7
opt1	p4	2	C310 x 31 MUDSILL	8 000	492.8
opt2	p4	2	PL13 x 200 MUDSILL	8 000	326.6
opt3	p4	4	PIPE 114.3 OD x 6.02 MUDSILL	8 000	515.2
opt3	p4.1	24	PL10 x 100 STIFFENER PLATE	290	54.6
opt3	p4.2	4	PL10 x 125 END CAP	475	18.6
	p5	108	L51 x 51 x 6.4 SPACER ANGLES	144	73.9
	p6	24	PL16 x 50 RUNNING STRIPS	2 555	385.1
	p7	2	PIPE 114.3 OD x 6.02 FENCE POST SLEEVE	444	14.3
	p8	2	PL6 x 50 SLEEVE BRACE	144	0.7
				opt1	3 415.8 kg

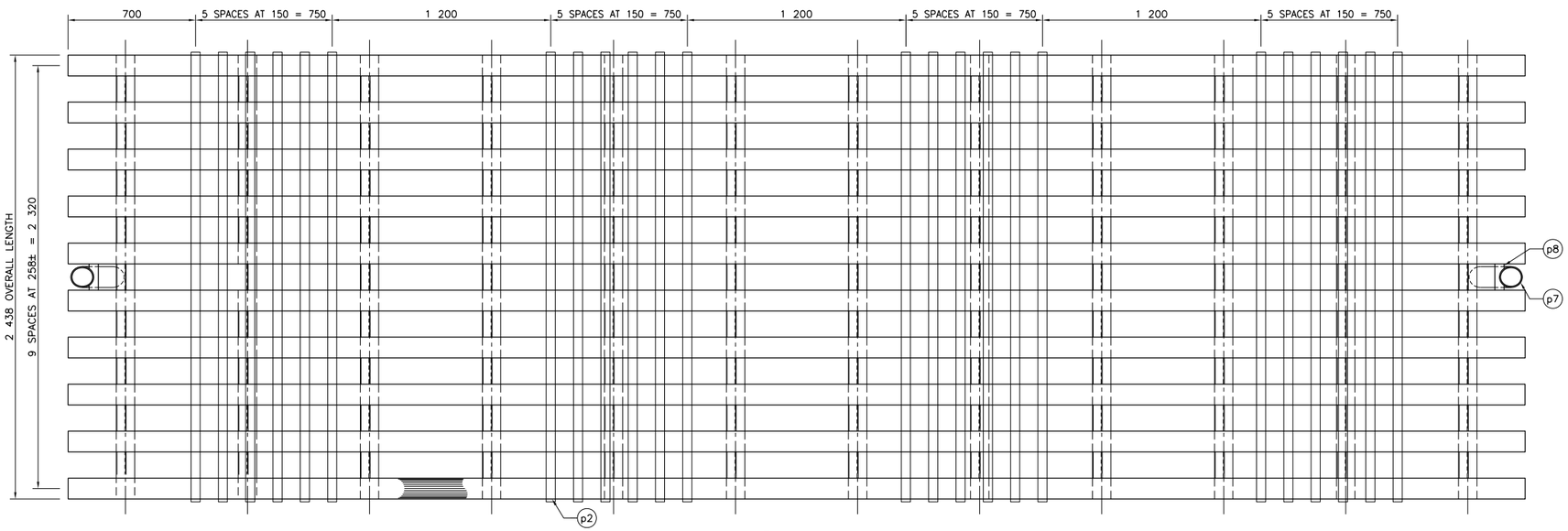

PLAN

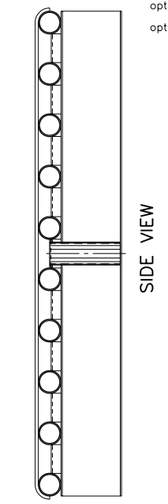

SIDE VIEW

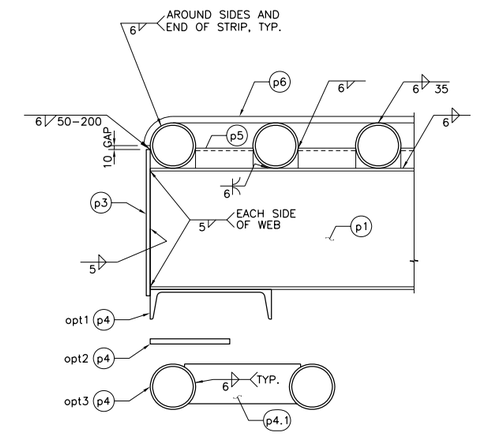

END PLATE AND SILL DETAIL

SCALE – 1 : 15
(WELDS SHOWN ARE TYPICAL FOR EACH ITEM)
(SEE DRAWING No. STD–ECAT–010–01
FOR SILL OPTIONS AND WELD DETAILS)

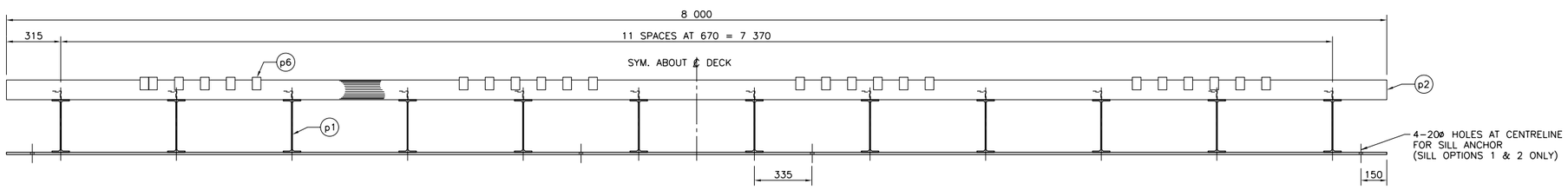

END VIEW (END PLATE NOT SHOWN FOR CLARITY)

PIPE DECK 8.00 m WIDE CATTLEGUARD

SCALE – 1 : 30

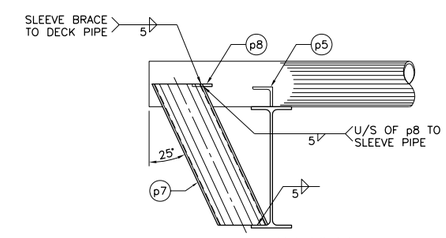

END VIEW

FENCE POST BRACE

SCALE – 1 : 15
(WELDS SHOWN ARE TYPICAL FOR EACH ITEM)

NOTES:

1. SEE DRAWING No. STD–ECAT–010–01 FOR DESIGN NOTES, STRUCTURAL STEEL NOTES, SILL OPTIONS AND SPLICE DETAILS.
2. NO MORE THAN 4 SPLICES ALLOWED IN TOTAL DECK AND NO SPLICED PIPE SHALL BE ADJACENT TO ANOTHER SPLICED PIPE.
3. THIS CATTLEGUARD HAS BEEN DESIGNED WITH THE FOLLOWING MULTI–LANE VEHICLE LOAD COMBINATIONS:
   - 90% BCL–625 IN BOTH LANES
   - 100% L–100 + 70% BCL–625
   - 100% LIGHT OFF–HIGHWAY + 70% BCL–625
4. MODEL TYPE ECAT–010–07.

ASSUME NOT TO SCALE

ORIGINAL SIGNED AND SEALED

Sargent & Associates Engineering Ltd.
HEAD OFFICE
1595 Bay Street, Unit B, Victoria, B.C. V8R 2B5
Phone: 250.370.9221 Fax: 250.370.9223

SCALE AS SHOWN

Designed	DAN	Date 2010/06/03
Checked	EYW	Date 2010/06/03
Drawn	DRM	Date 2010/06/03

Rev	Date	DESCRIPTION	Init

REVISIONS

BRITISH COLUMBIA
The Best Place on Earth

Ministry of Forests and Range
Engineering Branch, Field Operations Division

CATTLEGUARD 8.0 m x 2.438 m LONG FOR BCL–625, L–100 & LIGHT OFF–HIGHWAY VEHICLES

ORIGINAL SIGNED and SEALED BY: Ernie Wong, P.Eng.
MFR CHIEF ENGINEER: Brian Chow, P.Eng.
DESIGN ENGINEER: Ernie Wong, P.Eng.
DATE: DEC. 24, 2010
DATE
FILE No.
DRAWING No. STD–ECAT–010–07

CANCEL PRINTS BEARING PREVIOUS LETTER

File: C:\Folder for Backup\10.2509\MoFR Cattleguards\2509-7.dwg Plot Time: Dec. 24, 2010 – 12:59pm

MATERIAL LIST

	PIECE	QTY	DESCRIPTION	LENGTH mm	WEIGHT kg
	p1	13	W310 x 24 STRINGER	2 438	754.3
	p2	10	DECK PIPE 114.3 OD x 6.02	8 700	1 400.7
	p3	2	PL10 x 370 END PLATE	8 700	505.4
opt1	p4	2	C310 x 31 MUDSILL	8 700	535.9
opt2	p4	2	PL13 x 200 MUDSILL	8 700	355.1
opt3	p4	4	PIPE 114.3 OD x 6.02 MUDSILL	8 700	560.3
opt3	p4.1	26	PL10 x 100 STIFFENER PLATE	290	59.2
opt3	p4.2	4	PL10 x 125 END CAP	475	18.6
	p5	117	L51 x 51 x 6.4 SPACER ANGLES	144	80.0
	p6	24	PL16 x 50 RUNNING STRIPS	2 555	385.1
	p7	2	PIPE 114.3 OD x 6.02 FENCE POST SLEEVE	444	14.3
	p8	2	PL6 x 50 SLEEVE BRACE	144	0.7
				opt1	3 676.4 kg

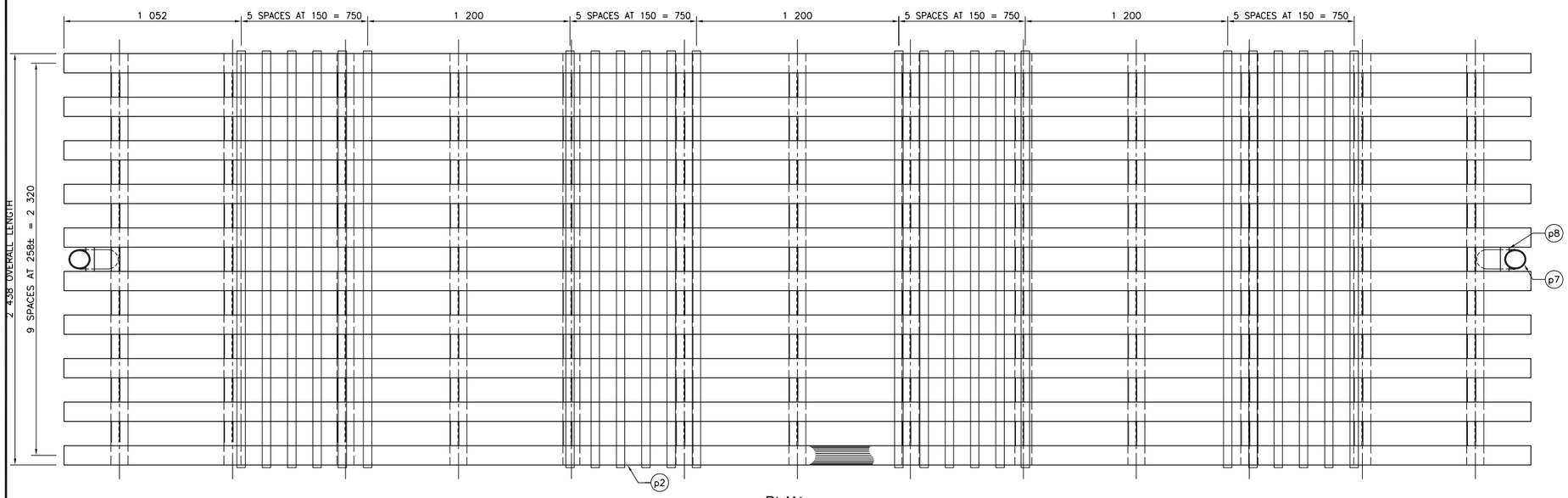

PLAN

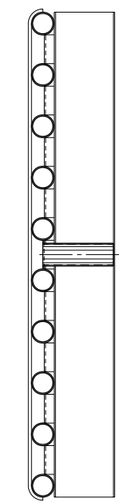

SIDE VIEW

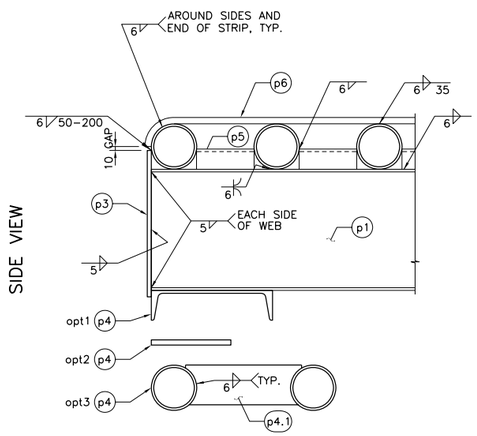

END PLATE AND SILL DETAIL

SCALE – 1 : 15
(WELDS SHOWN ARE TYPICAL FOR EACH ITEM)
(SEE DRAWING No. STD–ECAT–010–01
FOR SILL OPTIONS AND WELD DETAILS)

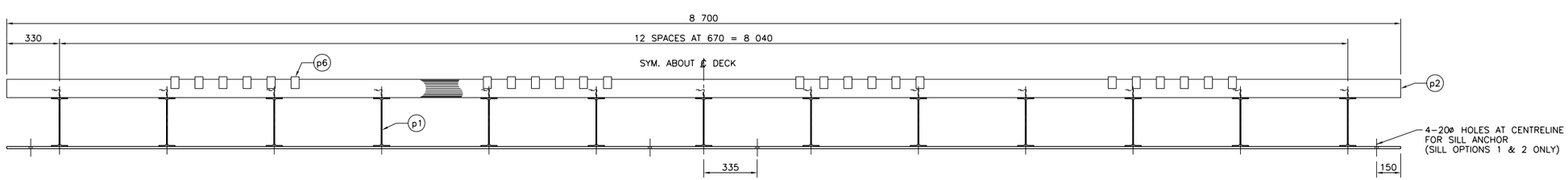

END VIEW (END PLATE NOT SHOWN FOR CLARITY)

PIPE DECK 8.70 m WIDE CATTLEGUARD

SCALE – 1 : 30

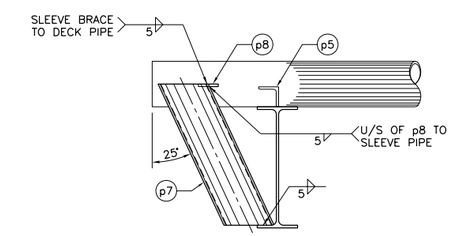

END VIEW

FENCE POST BRACE

SCALE – 1 : 15
(WELDS SHOWN ARE TYPICAL FOR EACH ITEM)

NOTES:

1. SEE DRAWING No. STD–ECAT–010–01 FOR DESIGN NOTES, STRUCTURAL STEEL NOTES, SILL OPTIONS AND SPLICE DETAILS.
2. NO MORE THAN 4 SPLICES ALLOWED IN TOTAL DECK AND NO SPLICED PIPE SHALL BE ADJACENT TO ANOTHER SPLICED PIPE.
3. THIS CATTLEGUARD HAS BEEN DESIGNED WITH THE FOLLOWING MULTI–LANE VEHICLE LOAD COMBINATIONS:
   - 90% BCL–625 IN BOTH LANES
   - 100% L–100 + 70% BCL–625
   - 100% LIGHT OFF–HIGHWAY + 70% BCL–625
4. MODEL TYPE ECAT–010–08.

ASSUME NOT TO SCALE

ORIGINAL SIGNED AND SEALED

Sargent & Associates Engineering Ltd.
HEAD OFFICE
1595 Bay Street, Unit B, Victoria, B.C. V8R 2B5
Phone: 250.370.9221 Fax: 250.370.9223

SCALE AS SHOWN

Designed	DAN	Date 2010/06/03
Checked	EYW	Date 2010/06/03
Drawn	DRM	Date 2010/06/03

Rev	Date	DESCRIPTION	Init

REVISIONS

BRITISH COLUMBIA
The Best Place on Earth

Ministry of Forests and Range
Engineering Branch, Field Operations Division

CATTLEGUARD 8.7 m x 2.438 m LONG FOR BCL–625, L–100 & LIGHT OFF–HIGHWAY VEHICLES

ORIGINAL SIGNED and SEALED BY: Ernie Wong, P.Eng.
MFR CHIEF ENGINEER: Brian Chow, P.Eng.
DESIGN ENGINEER: Ernie Wong, P.Eng.
DATE: DEC. 24, 2010
DATE
FILE No.
DRAWING No. STD–ECAT–010–08

CANCEL PRINTS BEARING PREVIOUS LETTER

File: C:\Folder for Backup\10.2529\MofR Cattleguards\3529-8.dwg Plot Time: Dec 24, 2010 – 12:57pm

MATERIAL LIST

	PIECE	QTY	DESCRIPTION	LENGTH mm	WEIGHT kg
	p1	12	W310 x 33 STRINGER	2 438	959.6
	p2	10	DECK PIPE 114.3 OD x 6.02	8 000	1 288.0
	p3	2	PL10 x 370 END PLATE	8 000	464.7
opt1	p4	2	C310 x 31 MUDSILL	8 000	492.8
opt2	p4	2	PL13 x 275 MUDSILL	8 000	449.0
opt3	p4	6	PIPE 114.3 OD x 6.02 MUDSILL	8 000	772.8
opt3	p4.1	48	PL10 x 100 STIFFENER PLATE	115	43.3
opt3	p4.2	4	PL10 x 125 END CAP	475	18.6
	p5	108	L51 x 51 x 6.4 SPACER ANGLES	144	73.9
	p6	32	PL16 x 50 RUNNING STRIPS	2 555	513.4
	p7	2	PIPE 114.3 OD x 6.02 FENCE POST SLEEVE	444	14.3
	p8	2	PL6 x 50 SLEEVE BRACE	144	0.7
				opt1	3 807.4 kg

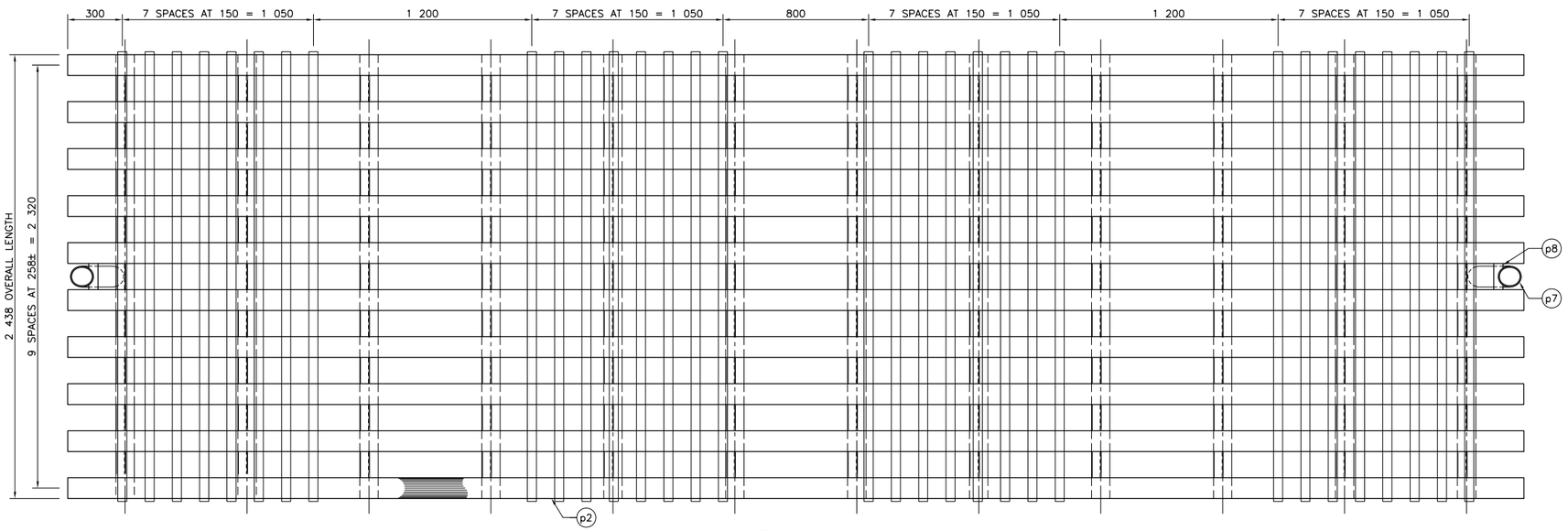

PLAN

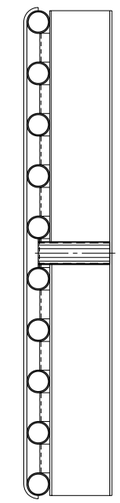

SIDE VIEW

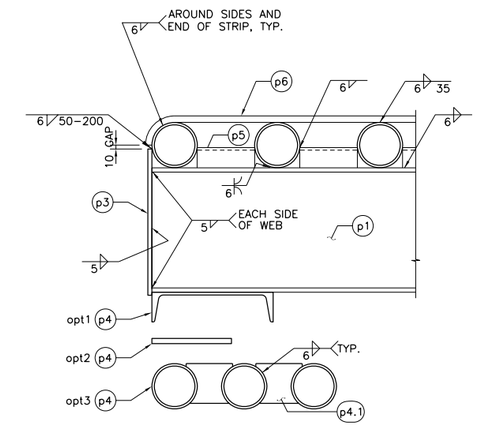

END PLATE AND SILL DETAIL

SCALE – 1 : 15
(WELDS SHOWN ARE TYPICAL FOR EACH ITEM)
(SEE DRAWING No. STD–ECAT–010–01 FOR SILL OPTIONS AND WELD DETAILS)

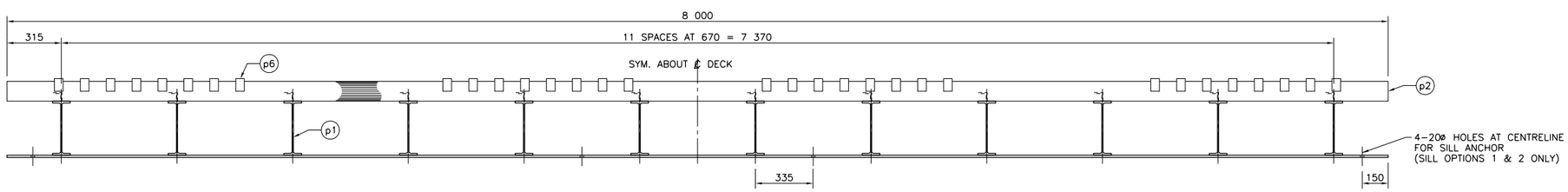

END VIEW (END PLATE NOT SHOWN FOR CLARITY)

PIPE DECK 8.00 m WIDE CATTLEGUARD

SCALE – 1 : 30

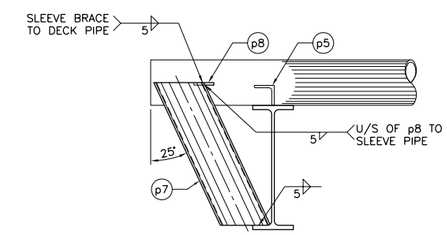

END VIEW

FENCE POST BRACE

SCALE – 1 : 15
(WELDS SHOWN ARE TYPICAL FOR EACH ITEM)

NOTES:

1. SEE DRAWING No. STD–ECAT–010–01 FOR DESIGN NOTES, STRUCTURAL STEEL NOTES, SILL OPTIONS AND SPLICE DETAILS.
2. NO MORE THAN 4 SPLICES ALLOWED IN TOTAL DECK AND NO SPLICED PIPE SHALL BE ADJACENT TO ANOTHER SPLICED PIPE.
3. THIS CATTLEGUARD HAS BEEN DESIGNED WITH THE FOLLOWING MULTI–LANE VEHICLE LOAD COMBINATION:
   – 100% HEAVY OFF–HIGHWAY + 70% BCL–625
4. MODEL TYPE ECAT–010–09.

ASSUME NOT TO SCALE

ORIGINAL SIGNED AND SEALED

Sargent & Associates Engineering Ltd.
HEAD OFFICE
1595 Bay Street, Unit B, Victoria, B.C. V8R 2B5
Phone: 250.370.9221 Fax: 250.370.9223

SCALE AS SHOWN

Designed	EYW	Date 2010/06/03
Checked	DAN	Date 2010/06/03
Drawn	DRM	Date 2010/06/03

Rev	Date	DESCRIPTION	Init

REVISIONS

BRITISH COLUMBIA
The Best Place on Earth

Ministry of Forests and Range
Engineering Branch, Field Operations Division

CATTLEGUARD 8.0 m x 2.438 m LONG
FOR HEAVY OFF–HIGHWAY VEHICLE

ORIGINAL SIGNED and SEALED BY: Ernie Wong, P.Eng.
MFR CHIEF ENGINEER: Brian Chow, P.Eng.
DESIGN ENGINEER: Ernie Wong, P.Eng.
DATE: DEC. 24, 2010
DATE
FILE No.
DRAWING No. STD–ECAT–010–09

CANCEL PRINTS BEARING PREVIOUS LETTER

File: C:\Folder for Backup\10.2509\NoFR Cattleguards\2509-9.dwg Plot Time: Dec 24, 2010 – 12:56pm

MATERIAL LIST

	PIECE	QTY	DESCRIPTION	LENGTH mm	WEIGHT kg
	p1	13	W310 x 33 STRINGER	2 438	1 039.6
	p2	10	DECK PIPE 114.3 OD x 6.02	8 700	1 400.7
	p3	2	PL10 x 370 END PLATE	8 700	505.4
opt1	p4	2	C310 x 31 MUDSILL	8 700	535.9
opt2	p4	2	PL13 x 275 MUDSILL	8 700	488.3
opt3	p4	6	PIPE 114.3 OD x 6.02 MUDSILL	8 700	840.4
opt3	p4.1	52	PL10 x 100 STIFFENER PLATE	115	46.9
opt3	p4.2	4	PL10 x 125 END CAP	475	18.6
	p5	117	L51 x 51 x 6.4 SPACER ANGLES	144	80.0
	p6	32	PL16 x 50 RUNNING STRIPS	2 555	513.4
	p7	2	PIPE 114.3 OD x 6.02 FENCE POST SLEEVE	444	14.3
	p8	2	PL6 x 50 SLEEVE BRACE	144	0.7
				opt1	4 090.0 kg

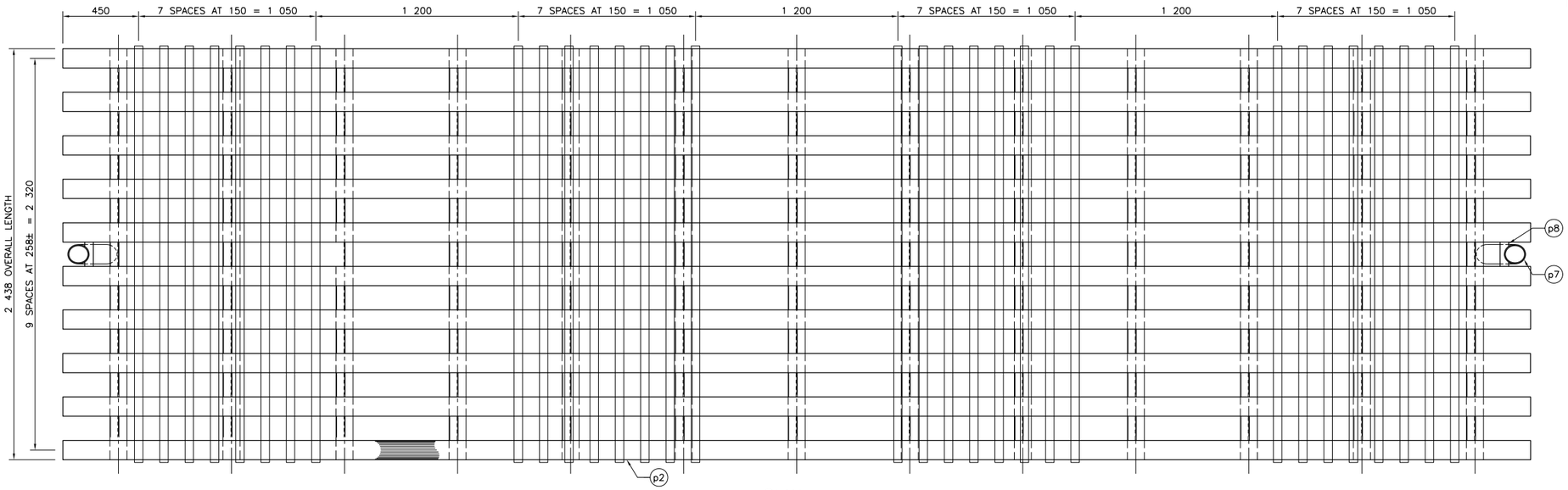

PLAN

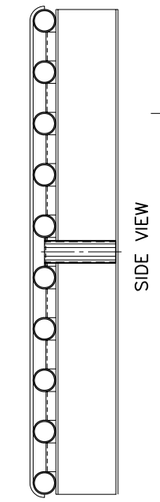

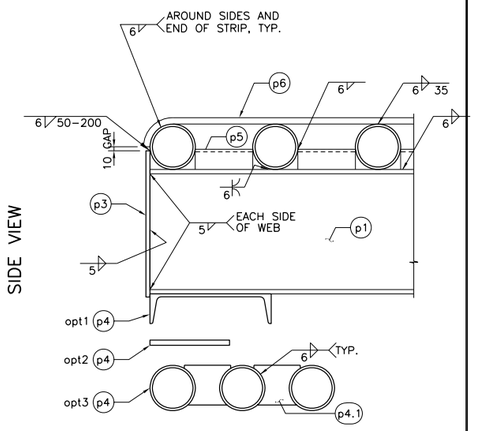

END PLATE AND SILL DETAIL

SCALE – 1 : 15
(WELDS SHOWN ARE TYPICAL FOR EACH ITEM)
(SEE DRAWING No. STD–ECAT–010–01
FOR SILL OPTIONS AND WELD DETAILS)

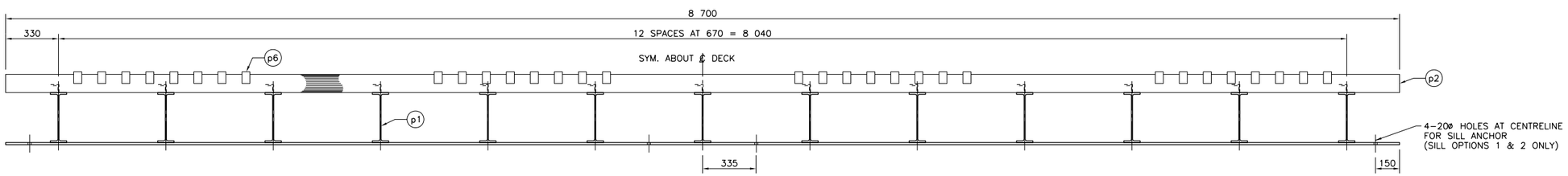

END VIEW (END PLATE NOT SHOWN FOR CLARITY)

PIPE DECK 8.70 m WIDE CATTLEGUARD

SCALE – 1 : 30

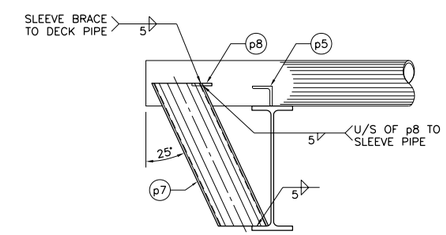

END VIEW

FENCE POST BRACE

SCALE – 1 : 15
(WELDS SHOWN ARE TYPICAL FOR EACH ITEM)

NOTES:

1. SEE DRAWING No. STD–ECAT–010–01 FOR DESIGN NOTES, STRUCTURAL STEEL NOTES, SILL OPTIONS AND SPLICE DETAILS.
2. NO MORE THAN 4 SPLICES ALLOWED IN TOTAL DECK AND NO SPLICED PIPE SHALL BE ADJACENT TO ANOTHER SPLICED PIPE.
3. THIS CATTLEGUARD HAS BEEN DESIGNED WITH THE FOLLOWING MULTI–LANE VEHICLE LOAD COMBINATION:
   – 100% HEAVY OFF–HIGHWAY + 70% BCL–625
4. MODEL TYPE ECAT–010–10.

ASSUME NOT TO SCALE

ORIGINAL SIGNED AND SEALED

Sargent & Associates Engineering Ltd.
HEAD OFFICE
1595 Bay Street, Unit B, Victoria, B.C. V8R 2B5
Phone: 250.370.9221 Fax: 250.370.9223

SCALE AS SHOWN

Designed	EYW	Date 2010/06/03
Checked	DAN	Date 2010/06/03
Drawn	DRM	Date 2010/06/03

Rev	Date	DESCRIPTION	Init

REVISIONS

BRITISH COLUMBIA
The Best Place on Earth

Ministry of Forests and Range
Engineering Branch, Field Operations Division

CATTLEGUARD 8.7 m x 2.438 m LONG
FOR HEAVY OFF–HIGHWAY VEHICLE

ORIGINAL SIGNED and SEALED BY: Ernie Wong, P.Eng.	MFR CHIEF ENGINEER: Brian Chow, P.Eng.
DESIGN ENGINEER: Ernie Wong, P.Eng. DATE: DEC. 24, 2010	DATE
FILE No.	DRAWING No. STD–ECAT–010–10

CANCEL PRINTS BEARING PREVIOUS LETTER

File: C:\Folder for Backup\10-2509\MoFR Cattleguards\2509-10.dwg Plot Time: Dec 24, 2010 – 12:55pm

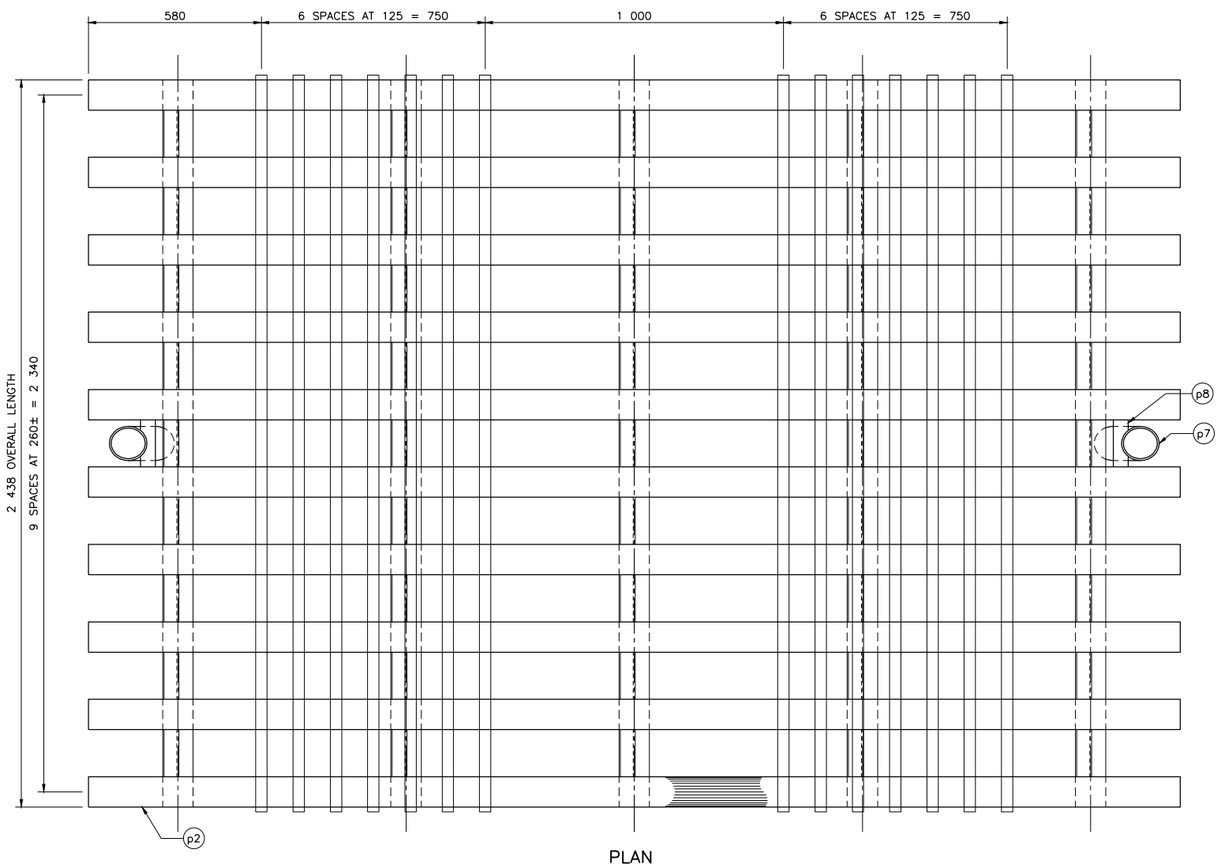

PLAN

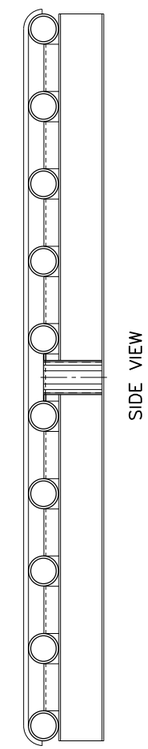

SIDE VIEW

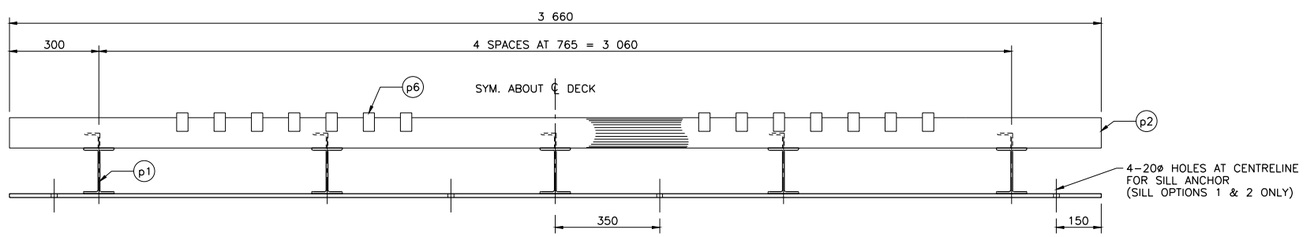

END VIEW (END PLATE NOT SHOWN FOR CLARITY)

PIPE DECK 3.66 m WIDE CATTLEGUARD

SCALE – 1 : 20

MATERIAL LIST

	PIECE	QTY	DESCRIPTION	LENGTH mm	WEIGHT kg
	p1	5	W150 x 18 STRINGER	2 438	219.4
	p2	10	DECK PIPE 101.6 OD x 8.08	3 660	680.8
	p3	2	PL10 x 205 END PLATE	3 660	117.8
opt1	p4	2	C310 x 31 MUDSILL	3 660	224.7
opt2	p4	2	PL13 x 200 MUDSILL	3 660	149.4
opt3	p4	4	PIPE 114.3 OD x 6.02 MUDSILL	3 660	235.7
opt3	p4.1	10	PL10 x 100 STIFFENER PLATE	290	22.8
opt3	p4.2	4	PL10 x 125 END CAP	475	18.6
	p5	45	L51 x 51 x 6.4 SPACER ANGLES	158	33.8
1	p6	14	PL16 x 38 RUNNING STRIPS	2 517	168.2
	p7	2	PIPE 114.3 OD x 6.02 FENCE POST SLEEVE	217	7.0
	p8	2	PL6 x 50 SLEEVE BRACE	158	0.7
				opt1	1 452.4 kg

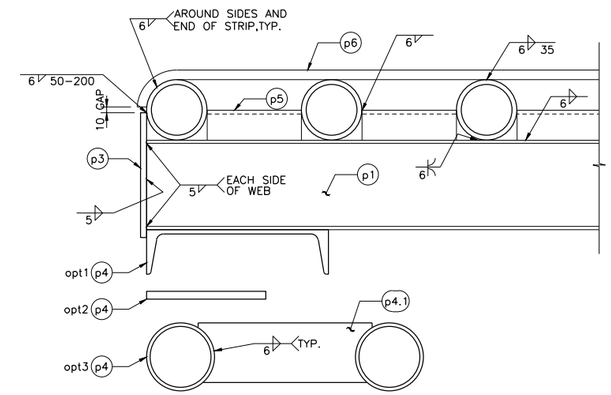

END PLATE AND SILL DETAIL

SCALE – 1 : 10

(WELDS SHOWN ARE TYPICAL FOR EACH ITEM)

(SEE DRAWING No. STD–ECAT–010–01 FOR SILL OPTIONS AND WELD DETAILS)

ASSUME NOT TO SCALE

ORIGINAL SIGNED AND SEALED

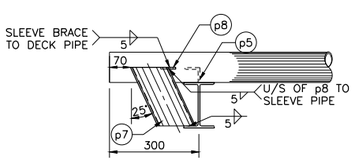

END VIEW

FENCE POST BRACE

SCALE – 1 : 20

(WELDS SHOWN ARE TYPICAL FOR EACH ITEM)

NOTES:

1. SEE DRAWING No. STD–ECAT–010–01 FOR DESIGN NOTES, STRUCTURAL STEEL NOTES, SILL OPTIONS AND SPLICE DETAILS.
2. NO MORE THAN 4 SPLICES ALLOWED IN TOTAL DECK AND NO SPLICED PIPE SHALL BE ADJACENT TO ANOTHER SPLICED PIPE.
3. MODEL TYPE ECAT–010–11.

McElhanney
McElhanney Consulting Services Ltd.
SUITE 500, 3960 QUADRA STREET
VICTORIA B.C. V8X 4A3
PH (250) 370-9221
FAX (250) 370-9223

SCALE AS SHOWN

Designed	DAN	Date	2015/02/06
Checked	EYW	Date	2015/02/06
Drawn	SEM	Date	2015/02/06

Rev	Date	DESCRIPTION	Init	
1	2016/04/20	p5, p6, p7, p8 (LENGTH AND WEIGHT UPDATED)	EYW	

REVISIONS

BRITISH COLUMBIA
The Best Place on Earth

Ministry of Forests and Range
Engineering Branch, Field Operations Division

CATTLEGUARD 3.66 m x 2.438 m LONG FOR RANGE VEHICLE TYPE 1 G.V.W. 4,500 kg

ORIGINAL SIGNED and SEALED BY: Ernie Wong, P.Eng.	MFR CHIEF ENGINEER: Brian Chow, P.Eng.
DESIGN ENGINEER: Ernie Wong, P.Eng. DATE: FEB. 06, 2015	DATE
FILE No.	DRAWING No. STD–ECAT–010–11 | 1

CANCEL PRINTS BEARING PREVIOUS LETTER

File: F:\Projects\2658 FLNRO Range Cattleguard Standard Drawing\CAD Drawings\2509-11.dwg Plot Time: Apr 22, 2016 - 10:30am

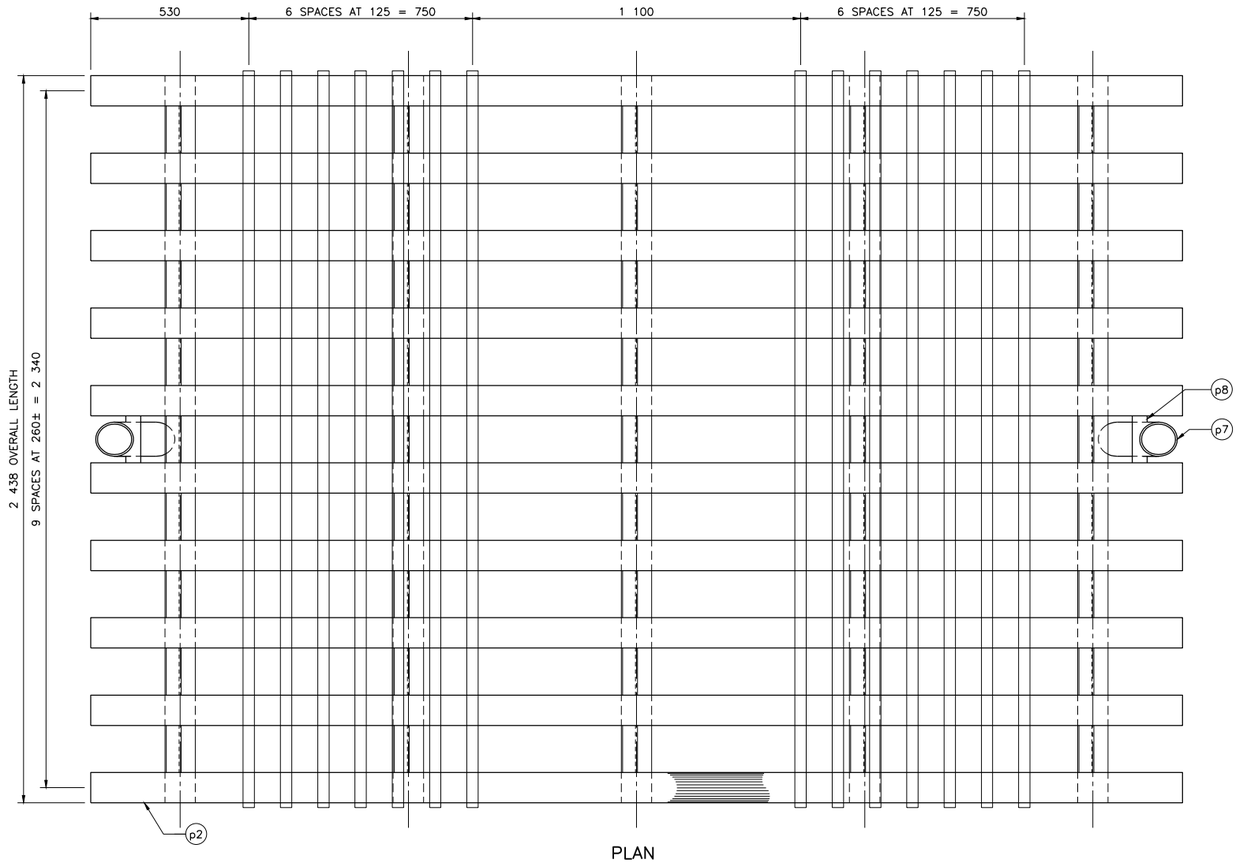

PLAN

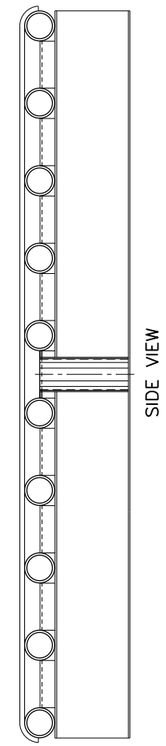

SIDE VIEW

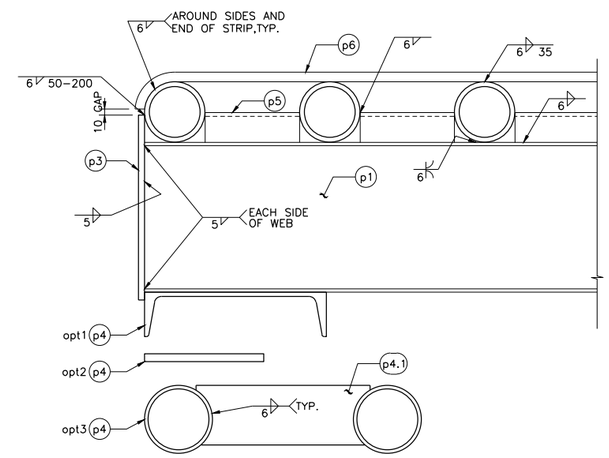

END PLATE AND SILL DETAIL

SCALE – 1 : 10

(WELDS SHOWN ARE TYPICAL FOR EACH ITEM)

(SEE DRAWING No. STD–ECAT–010–01 FOR SILL OPTIONS AND WELD DETAILS)

MATERIAL LIST

	PIECE	QTY	DESCRIPTION	LENGTH mm	WEIGHT kg
	p1	5	W250 x 22 STRINGER	2 438	273.1
	p2	10	DECK PIPE 101.6 OD x 8.08	3 660	680.8
	p3	2	PL10 x 310 END PLATE	3 660	178.1
opt1	p4	2	C310 x 31 MUDSILL	3 660	224.7
opt2	p4	2	PL13 x 200 MUDSILL	3 660	149.4
opt3	p4	4	PIPE 114.3 OD x 6.02 MUDSILL	3 660	235.7
opt3	p4.1	10	PL10 x 100 STIFFENER PLATE	290	22.8
opt3	p4.2	4	PL10 x 125 END CAP	475	18.6
	p5	45	L51 x 51 x 6.4 SPACER ANGLES	158	33.8
	p6	14	PL16 x 38 RUNNING STRIPS	2 517	168.2
	p7	2	PIPE 114.3 OD x 6.02 FENCE POST SLEEVE	330	10.6
	p8	2	PL6 x 50 SLEEVE BRACE	158	0.7
				opt1	1 570 kg

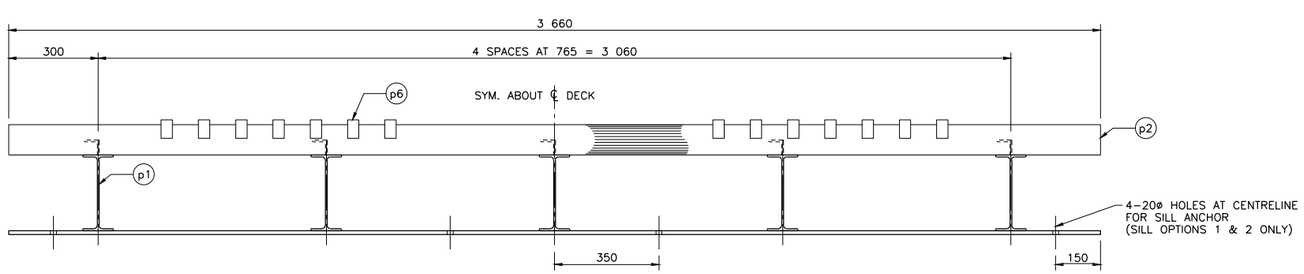

END VIEW (END PLATE NOT SHOWN FOR CLARITY)

PIPE DECK 3.66 m WIDE CATTLEGUARD

SCALE – 1 : 20

ASSUME NOT TO SCALE

ORIGINAL SIGNED AND SEALED

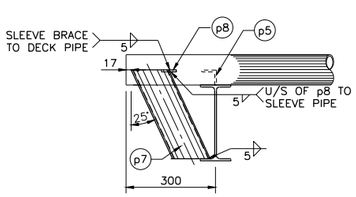

END VIEW

FENCE POST BRACE

SCALE – 1 : 20

(WELDS SHOWN ARE TYPICAL FOR EACH ITEM)

NOTES:

1. SEE DRAWING No. STD–ECAT–010–01 FOR DESIGN NOTES, STRUCTURAL STEEL NOTES, SILL OPTIONS AND SPLICE DETAILS.
2. NO MORE THAN 4 SPLICES ALLOWED IN TOTAL DECK AND NO SPLICED PIPE SHALL BE ADJACENT TO ANOTHER SPLICED PIPE.
3. MODEL TYPE ECAT–010–12.

McElhanney
McElhanney Consulting Services Ltd.
SUITE 500, 3960 QUADRA STREET
VICTORIA B.C. V8X 4A3
PH (250) 370-9221
FAX (250) 370-9223

SCALE AS SHOWN

Designed	DAN	Date 2015/02/06
Checked	EYW	Date 2015/02/06
Drawn	SEM	Date 2015/02/06

Rev	Date	DESCRIPTION	Init

REVISIONS

BRITISH COLUMBIA
The Best Place on Earth

Ministry of Forests and Range
Engineering Branch, Field Operations Division

CATTLEGUARD 3.66 m x 2.438 m LONG FOR RANGE VEHICLE TYPE 2 G.V.W. 8,850 kg

ORIGINAL SIGNED and SEALED BY: Ernie Wong, P.Eng.

MFR CHIEF ENGINEER: Brian Chow, P.Eng.

DESIGN ENGINEER: Ernie Wong, P.Eng.

DATE: FEB. 06, 2015

DATE

FILE No.

DRAWING No. STD–ECAT–010–12

CANCEL PRINTS BEARING PREVIOUS LETTER

File: F:\Projects\2058 FLNRO Range Cattleguard Standard Drawing\2539-12.dwg Plot Time: Feb 06, 2015 - 9:30am