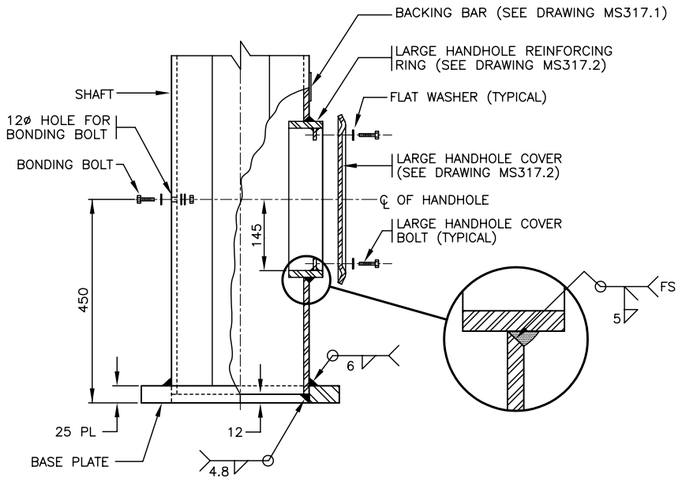

BASE PLATE – SIDE VIEW

FOR TYPE 1 AND 3 SHAFTS

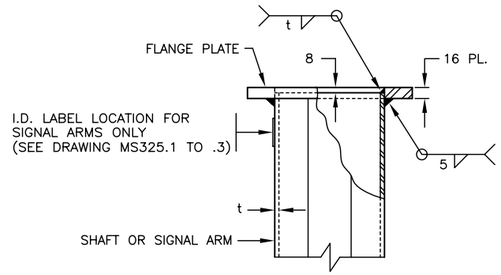

TYPE 1 FLANGE WELDING DETAILS

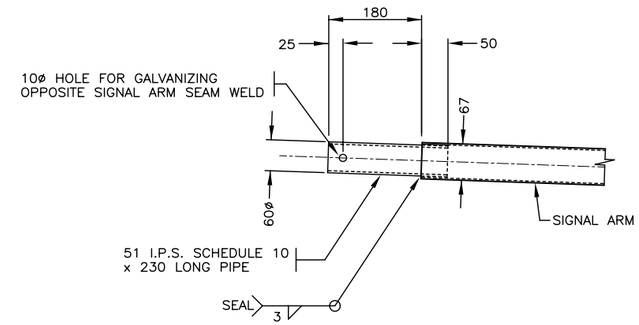

SIGNAL ARM TENON DETAIL

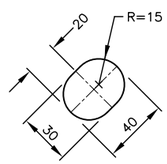

SLOTTED HOLE DETAIL

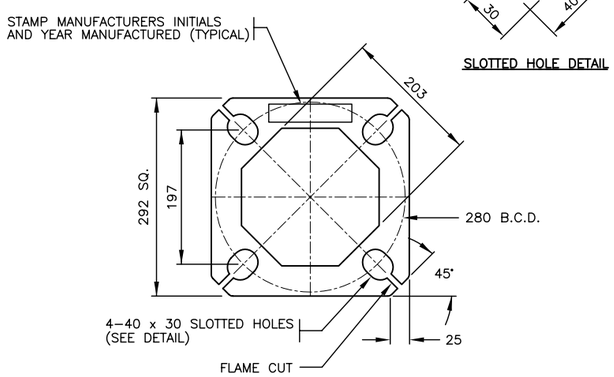

BASE PLATE – PLAN VIEW

FOR TYPE 1 AND 3 SHAFTS

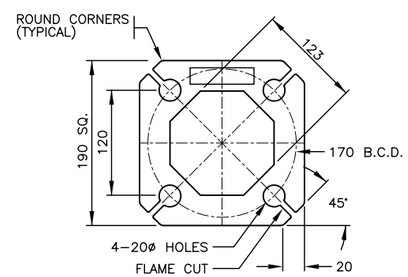

TYPE 1 FLANGE – PLAN VIEW

SEE DRAWINGS MS314.1 AND MS314.2 FOR NOTES

NOT TO SCALE

No.	Description	Date
J		
I		
H		
G		
F		
E		
D		
C		
B		
A	REPLACED SMALL HANDHOLE WITH LARGE HANDHOLE	NOV00

REVISION

TYPE 1 & 3 SHAFTS AND ARMS

BASE PLATE, FLANGE AND TENON DETAILS

BRITISH COLUMBIA — Ministry of Transportation and Highways

Drawing No. MS314.3 A

\\PDC01\P_DRIVE\STANDARDS\MOTH AND MUNICIPAL MATERIAL STANDARDS\MOTH MATERIAL STANDARDS\SECT3000SIGNWGS\CHAP301 TRAFFIC SIGNAL POLES\MS314.5A.DWG Last edited: 00/12/14 @ 10:19