PARTS LIST FOR TYPE 2 SHAFT		
PART	MINISTRY STOCK NUMBER	APPROX. MASS (kg)
TYPE 2 – 5.0 m SHAFT	SN1822A	83
TYPE 2 – 6.5 m SHAFT	SN1823	102
TYPE 2 – 8.5 m SHAFT	SN1824	128
TYPE 2 – 11.0m SHAFT	SN1825	252
TYPE 2A LUMINAIRE ARM	SN1832	35
TYPE 2C LUMINAIRE ARM	SN1833	65
POST TOP TENON	SN1831	5
TYPE 1 FLANGE COVER PLATE	SN1367	1.5
TYPE 2 SHAFT BOLT KIT	SN1791	5.5
TYPE 2 (11.0 m SHAFT) BOLT KIT	SN1791A	4.5

NOTES

1. SEE MATERIAL STANDARD SPECIFICATIONS CHAPTER 301 – TRAFFIC SIGNAL, LUMINAIRE, AND SIGN POLE STRUCTURES FOR ADDITIONAL INFORMATION.
2. SEE DRAWING MS310.3 FOR BOLT KIT DETAILS.
3. SEE DRAWING MS317.6 FOR POST TOP TENON DETAIL.
4. SEE DRAWING MS317.5 FOR FLANGE COVER PLATE DETAIL.
5. ALL DIMENSIONS ARE IN MILLIMETRES UNLESS OTHERWISE NOTED.
6. 'SN' DENOTES MINISTRY STOCK NUMBER.

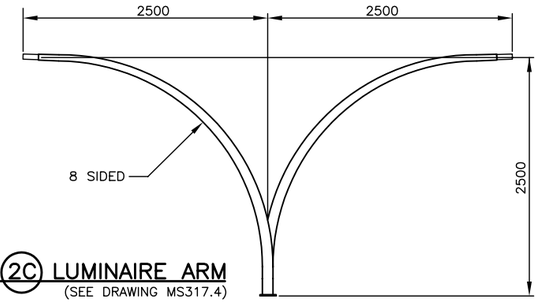

TYPE 2C LUMINAIRE ARM
(SEE DRAWING MS317.4)

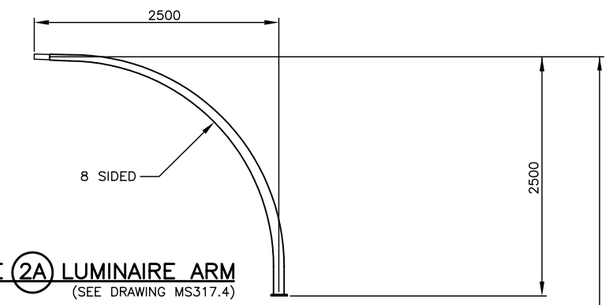

TYPE 2A LUMINAIRE ARM
(SEE DRAWING MS317.4)

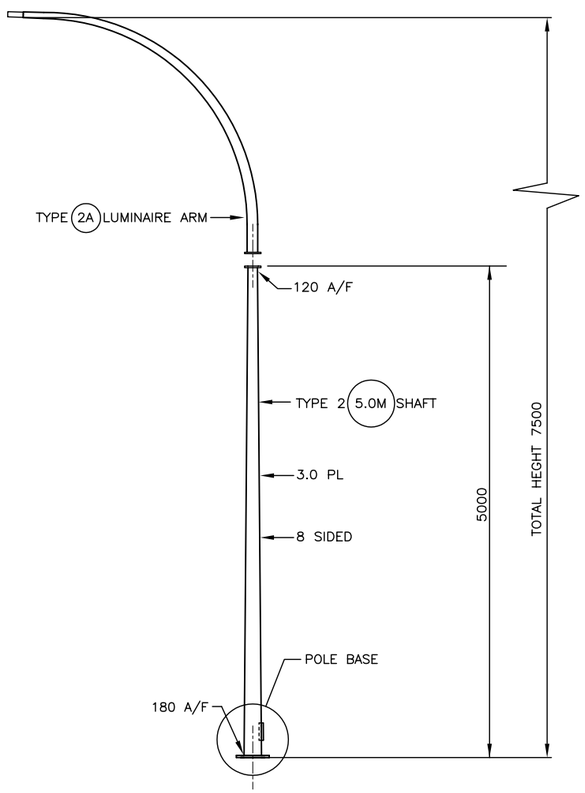

7.5 m LUMINAIRE POLE

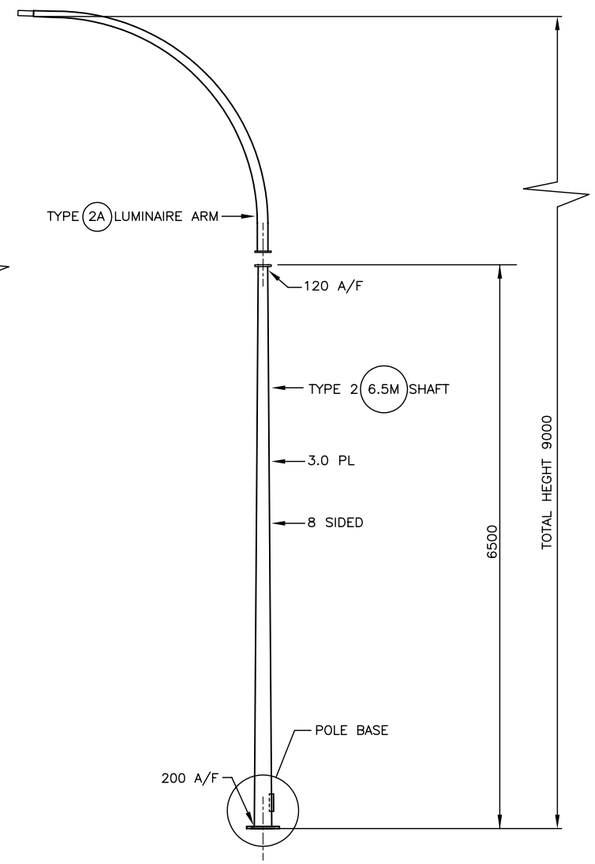

9.0 m LUMINAIRE POLE

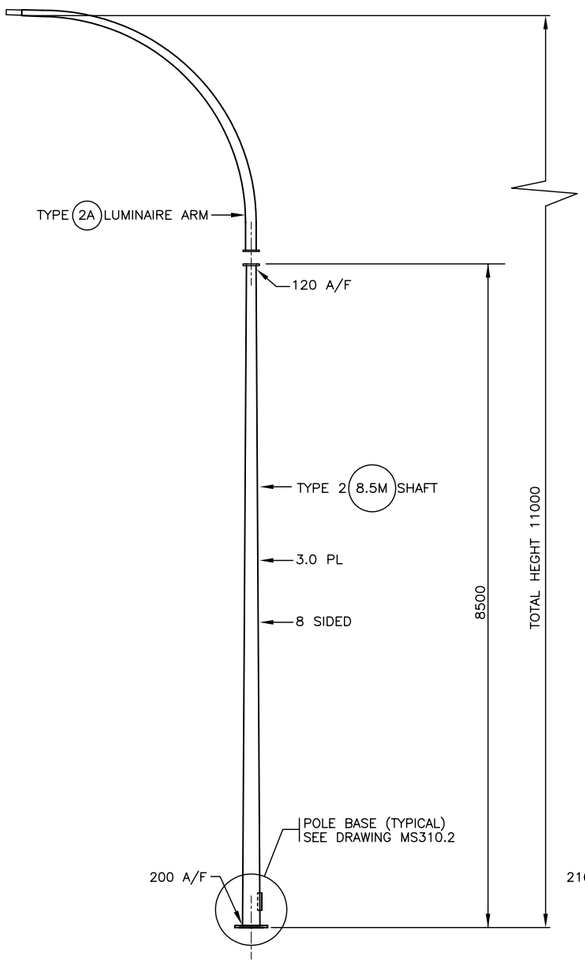

11.0 m LUMINAIRE POLE

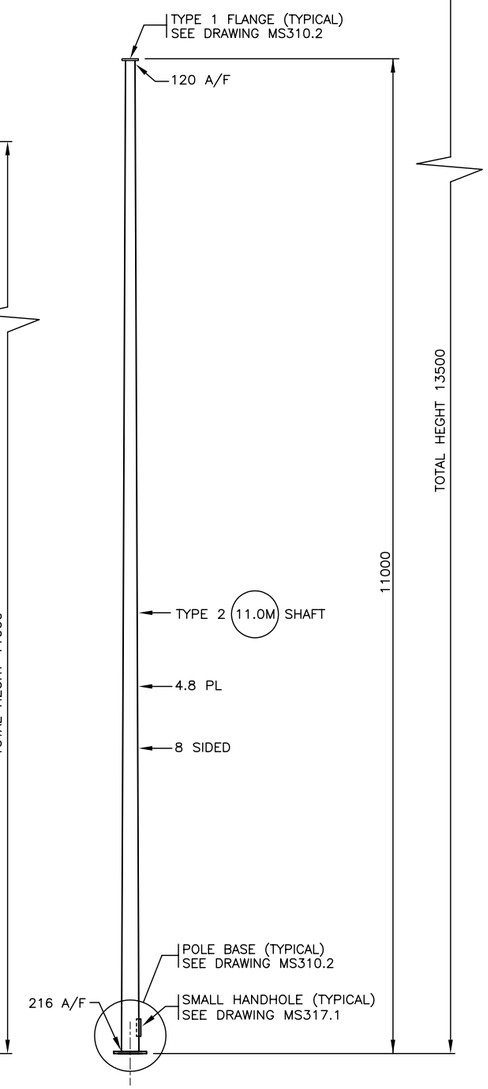

13.5 m LUMINAIRE POLE

NOT TO SCALE

'A/F' DENOTES ACCROSS THE FLATS

No.	Description	Date
J		
I		
H		
G		
F		
E		
D		
C		
B		
A		

REVISION

TYPE 2 SHAFTS AND ARMS

ELEVATIONS

BRITISH COLUMBIA
Ministry of Transportation and Highways

Drawing No.
MS310.1

File: \\200SSERVER\P_DRIVE\ACTIVEPROJECTS\03003_2003 MATERIAL STANDARDS WORKS\03003-01_2003 MATERIAL STANDARDS WORKS\DRAWINGS_DESIGN DRAWINGS\CHAPTER 300 DRAWINGS\MS310.DWG Last edited: DEC. 01, 03 @ 12:45 p.m. by: rlima